oasis heat pumps

SuperChill

Installation & User MANUAL



sunlover
sales@sunloverheating.com.au
sunloverheating.com.au

SPASA MEMBER

Welcome



CONGRATULATIONS ON THE PURCHASE OF YOUR OASIS HEAT PUMP!

Thank you for choosing Oasis.

This manual contains important information relating to the safe installation, commissioning, operation, maintenance and troubleshooting of your heat pump. Please read these instructions carefully before installing or operating the unit and retain this manual for future reference.

Following the instructions and maintenance requirements in this manual will help ensure safe operation, optimal performance and long service life.

While every effort has been made to ensure the information contained in this publication is accurate and complete at the time of printing, Sunlover Heating reserves the right to make changes without notice and accepts no liability for errors or omissions.

Online Warranty Registration

Registering your Oasis Heat Pump is fast and easy, providing peace of mind that you've got great backup support for the life of your pool heating!

- Scan QR code,
- No need to create an account,
- Fill in your details,
- Upload a photo of the serial number,
- Submit.

https://sunloverheating.com.au/heat-pump-warranty-registration/

Copyright © 2026 Sunlover Heating Pty Ltd. All rights reserved.

This instruction manual, including all text, diagrams, images, specifications, and layout, is the intellectual property of Sunlover Heating Pty Ltd, ABN 95 128 491 734.

No part of this publication may be copied, reproduced, distributed, translated, stored in a retrieval system, or transmitted in any form or by any means, whether electronic, mechanical, photocopying, recording, or otherwise, without the prior written permission of Sunlover Heating Pty Ltd.

Unauthorised use of this material is strictly prohibited.

Table of Contents

1 Foreword

2 Safety Precaution

3 Safety Instructions
(Installer & User)

5 Specifications

7 Transportation

8 Pre-Installation

11 Unpacking & Preparation

13 Plumbing Connections

16 Electrical Connections

19 Commissioning & Initial Start-Up

22 Controller Operation

28 Maintenance Requirements

30 Safety Instructions
(Service & Repair Technicians)

36 Service Information

43 Troubleshooting

47 Warranty

50 Appendix A
(Multiple Unit Installations)

54 Appendix B
(Automation & Remote Control)

57 Notes



Foreword

1.1 Purpose of This Manual

This manual provides essential information for the safe installation, operation, servicing and decommissioning of this heat pump system.

It is intended to ensure:

- Safe use of the appliance
- Correct installation practices
- Compliance with applicable standards and regulations
- Protection of persons, property and the equipment

Important

These instructions do not purport to cover all possible conditions, equipment variations, or situations that may occur during installation, operation, or maintenance. Should a situation arise that is not adequately covered by this manual, seek advice from a suitably qualified installer, service technician, electrician or Sunlover Heating before proceeding.

1.2 Sections for Different Users

This manual is divided into sections for different users:

- Installers
  Licensed tradespeople responsible for installation and commissioning.
- *Operators (End Users)*
  Persons using the system in normal operation.
- Service Technicians
  Qualified personnel performing maintenance, repair or decommissioning.

1.3 Important Installation and Repair Notice

Installation must be carried out by appropriately trained and qualified personnel in accordance with all local regulations and the national wiring rules.

Servicing and refrigerant handling must only be performed by qualified technicians, observing all safety instructions as outlined in ***Section 13 – Safety Instructions (Service & Repair Technicians***).

Warning

Failure to follow the instructions in this manual may result in death or serious injury, property damage or equipment failure.

1.4 Maintenance Requirements

This appliance is not a maintenance-free product. It requires routine inspection and maintenance to ensure safe operation, optimal performance, and long service life. Failure to carry out regular maintenance may result in reduced efficiency, faults, premature wear, or potential safety risks. In addition, failure to maintain the unit in accordance with these instructions may affect warranty coverage. Refer to ***Section 12 – Maintenance Requirements*** for detailed maintenance instructions and required intervals.

1.5 Retain This Manual

This manual must be provided to the owner and/or operator of the equipment and retained for future reference.

2.1 Instructions and Symbols

Ensure all safety instructions are read and understood prior to installing, operating, or servicing the unit. The following ISO symbols and signal words are used throughout this manual, and on the heat pump itself to identify hazards according to their level of severity and to provide specific installation and service guidance.

	**DANGER**	Indicates an imminent hazard that will result in death or serious injury if not avoided. This signal word is reserved for the most extreme situations.
	**WARNING**	Indicates a potentially hazardous situation that could result in death or serious injury if not avoided.
	**CAUTION**	Indicates a potentially hazardous situation that could result in minor or moderate injury if not avoided. This also may be used to alert against unsafe practices.
	**NOTICE**	Indicates a situation that could result in equipment damage or property damage if not avoided.
	**IMPORTANT**	Indicates important information that must be understood and followed.
	**TIP**	Provides useful information to assist with installation, operation, or maintenance. These tips help improve efficiency, performance, or ease of use.
	**FLAMMABLE REFRIGERANT**	This symbol indicates that the appliance contains flammable refrigerant. If the refrigerant leaks and is exposed to an external ignition source, there is a risk of fire.
	**ELECTRIC SAFETY WARNING**	This symbol indicates a risk of electric shock. Always isolate the power supply before cleaning, inspection, or servicing.
 	**READ INSTRUCTIONS**	This symbol indicates that the instruction manual must be read and understood before installing or operating the appliance.
	**SERVICE REQUIREMENT**	This symbol indicates that the equipment requires servicing or maintenance. Qualified service personnel should refer to the manufacturer's instructions.
	**RECYCLING CAUTION**	This symbol indicates that the appliance must be disposed of at an appropriate facility for recovery and recycling in accordance with local regulations.

3.1 Installation Safety (For Installers)

The appliance is primarily intended for installation outdoors; however, it may be installed indoors providing that all relevant air clearance and ventilation requirements are met (*see **Section 6 – Pre-Installation***).

The installation must comply with:

- Local electrical and plumbing regulations;
- Relevant building codes; and
- Any other applicable standards.

Ensure the following:

- The unit is sitting level and is securely mounted on a stable surface capable of supporting its weight;
- The installation location allows adequate ventilation;
- The unit is not installed in areas where an ignition source may be present; and
- All plumbing connections and condensate drainage pipework are correctly installed to prevent water leakage.

Electrical Safety

- The electrical installation must be completed by a qualified electrician in accordance with the AS/NZS 3000 Wiring Rules.
- The heat pump must be connected to a dedicated sub-circuit which is 30mA RCD protected.
- A disconnection switch which has at least 3mm clearance in all poles must be incorporated in the fixed wiring.
- The appliance must be properly earthed.

3.2 Refrigerant Safety (For Installers)

Refrigerant Safety (General Awareness)

- This appliance contains a flammable refrigerant. Ensure adequate ventilation around the unit at all times.
- The appliance shall be stored in a room without continuously operating ignition sources (for example: open flames, an operating gas appliance, or an operating electric heater).
- Be aware that refrigerants may not contain an odour.
- If a refrigerant leak is suspected, ensure the following:
  - Turn off the unit immediately
  - Isolate electrical power
  - Contact a qualified technician
- Do not use means to accelerate the defrosting process or to clean the heat pump, other than those recommended by the manufacturer.
- Do not pierce or burn the unit.

3.3 Safe Operation (For Users)

Warning

- This appliance is not intended for use by young children or infirm persons without supervision. Please ensure that young children are supervised to ensure they do not play with the appliance. Incorrect operation may result in injury or equipment damage.
- Do not operate the unit if a fault or error code is present.
- Do not insert fingers or objects into the fan grille or evaporator (radiator) fin coil.
- Do not operate the unit with wet hands.
- Do not unplug or disconnect power during operation.
- Do not allow water to enter electrical components.

Caution

- Do not place any hazardous materials close to the unit. Pool acid and other chemical containers must be stored well away from the heat pump to prevent fumes and fluids from damaging the evaporator fin coil and other components.
- Turn off power before cleaning the heat pump cabinet.
- Where applicable, the appliance shall be stored so as to prevent mechanical damage from occurring.

Specifications

Important

The data shown applies only to the Oasis heat pump and does not include any auxiliary equipment. Product specifications were accurate at the time of printing but may change without notice.
For the latest product information, visit the Oasis Heat Pumps website or contact an Oasis heat pump dealer.

4.1 Performance Data

	Cooling Capacity			SCi2-8	SCi2-13	SCi2-17
Air 35°C Water 29°C	Cooling Capacity		kW	5.08 ~ 8.31	5.56 ~ 13.15	7.58 ~ 16.75
	Consumed Power		kW	1.18 ~ 2.90	0.7 ~ 2.45	1.34 ~ 5.02
	EER			4.30 ~ 2.87	7.94 ~ 5.37	5.66 ~ 3.34
Air 27°C Water 5°C	Cooling Capacity		kW	3.05 ~ 6.18	3.62 ~ 7.30	4.92 ~ 10.83
	Consumed Power		kW	0.93 ~ 2.71	0.63 ~ 1.82	1.09 ~ 3.67
	EER			3.28 ~ 2.28	5.75 ~ 4.01	4.51 ~ 2.95
Air 15°C Water 5°C	Cooling Capacity		kW	5.07 ~ 8.38	5.33 ~ 9.89	6.21 ~ 13.94
	Consumed Power		kW	1.04 ~ 2.95	0.88 ~ 1.94	1.03 ~ 3.75
	EER			4.88 ~ 2.84	6.06 ~ 5.10	6.03 ~ 3.72
	Heating Capacity					
Air 27°C Water 26°C	Heating Capacity		kW	3.73 ~ 18.09	4.34 ~ 21.08	5.55 ~ 28.14
	Consumed Power		kW	0.31 ~ 3.17	0.27 ~ 2.94	0.45 ~ 4.94
	COP			12.03 ~ 5.71	16.34 ~ 7.18	12.33 ~ 5.70
Air 15°C Water 26°C	Heating Capacity		kW	5.51 ~ 12.85	3.04 ~ 14.95	3.85 ~ 20.30
	Consumed Power		kW	0.81 ~ 3.24	0.35 ~ 2.97	0.46 ~ 4.65
	COP			6.80 ~ 3.97	8.66 ~ 5.04	8.37 ~ 4.37
Technical Specifications	Operating Air Temperature		°C		0 ~ 43	
	Refrigerant				R32	
	IPX Rating				IPX4	
	Sound Pressure at 1m		dB(A)	46 ~ 56	47 ~ 57	48 ~ 59
	Net Dimensions	*L x W x H*	mm	1002 × 391 × 654	1192 × 447 × 775	1192 × 447 × 775
	Shipping Dimensions	*L x W x H*	mm	1065 x 420 x 786	1255 x 470 x 917	1255 x 470 x 917
	Net / Shipping Weight		kg	70 / 79	82 / 96	89 / 103
Electrical	Power Supply		V/Ph/Hz	230/1/50	230/1/50	230/1/50
	Electrical Connection			Hardwired	Hardwired	Hardwired
	Max Running Current	*per phase*	amps	18.5	22.0	24.4
Water	Connection			DN40	DN40	DN40
	Minimum Flow Volume		l/m	130	160	190
	Pressure Drop	*max*	kPa	29	36	36

4.2 Dimensions

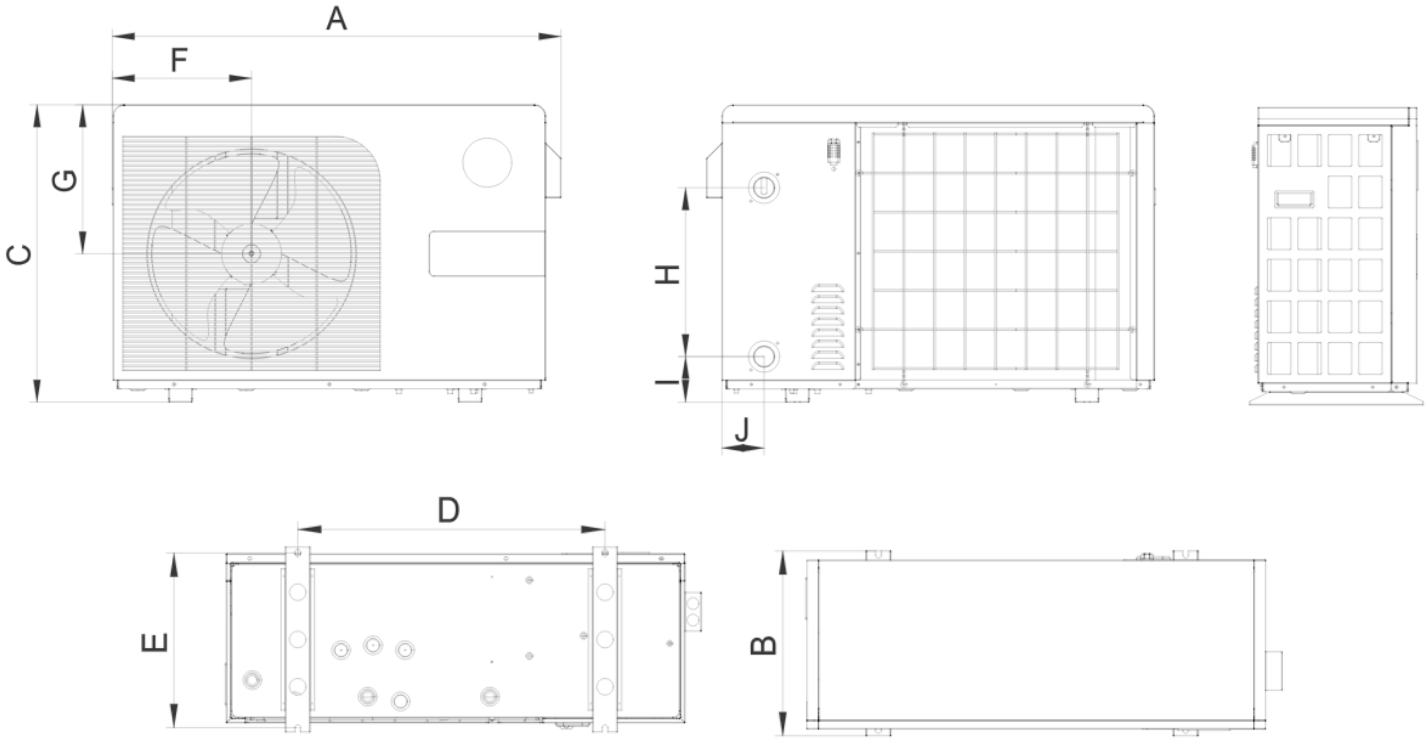

	A	B	C	D	E	F	G	H	I	J
SCi2-8	1012	391	669	653	370	314	335	380	103	95
SCi2-13	1201	447	790	720	425	370	422	470	108	126
SCi2-17										

Transportation

5.1 Handling Requirements

Notice

The heat pump must be transported and stored upright at all times to protect the compressor, refrigerant circuit and other internal components. Tilting, laying the unit down or storing it incorrectly may cause damage that is not covered under warranty.

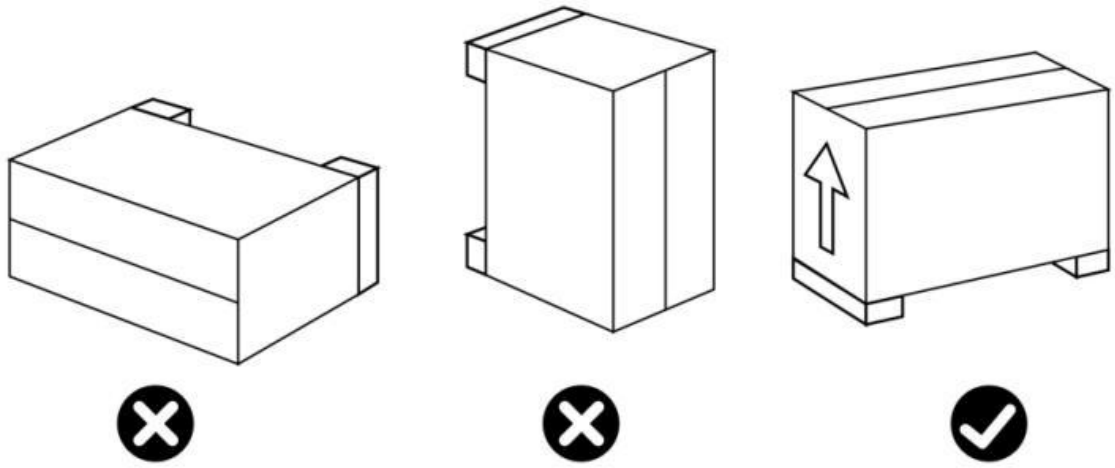

The unit must remain upright at all times

Notice

If the heat pump needs to be moved on site after unboxing, do not lift or carry it by the water unions or associated fittings. This may damage the internal heat exchanger, unions or associated components.

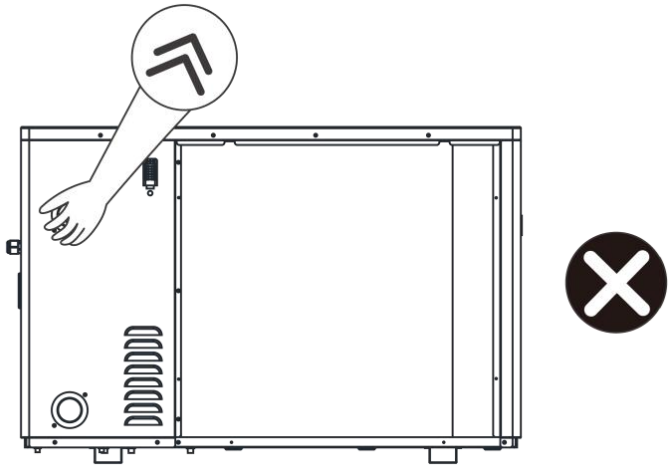

Do not lift the unit by the water fittings

Before installing the heat pump, confirm that the installation site, services and system design comply with the requirements outlined in this section. The following information supports a well-planned installation that promotes correct operation, optimal performance, safe use and long-term serviceability.

Installation Location

Condensate Management

Air Clearance

Water Flow

Mounting Surface

Service Access

6.1 Installation Location

The heat pump must be installed in a suitable outdoor location that allows for safe operation, adequate airflow and long-term reliability.
The following requirements must be considered when selecting an installation location:

Electrical Safety

The heat pump has an IPX4 ingress protection rating and AS/NZS 3000 (The Wiring Rules) stipulates that it must be installed more than 2.0m from the water's edge. Consult with your electrician for any other site-specific electrical requirements that may be applicable to you.

General Requirements

- The unit must be installed outdoors in a well-ventilated area. The unit must be positioned to avoid recirculation of discharged air.
- Do not install the unit in enclosed or confined spaces, such as sheds, under decks or within plant enclosures, unless appropriate mechanical ventilation is provided.

Environmental Conditions

- Do not install the unit in areas where flammable gases or vapours may be present.
- Avoid locations exposed to corrosive environments, including chemical storage areas or coastal environments without appropriate protection.
- The unit should not be exposed to direct discharge of rainwater, such as from roof run-off or without adequate drainage control.
- Ensure the installation area remains clean, dry and free from debris, which may obstruct airflow or damage the unit.

Positioning Considerations

- Position the unit as close as practical to the pool or spa to minimise heat loss or gain through the pipework.
- Locate the unit where maintenance and servicing can be carried out safely and conveniently.
- During operation, the heat pump will discharge condensate water. Install the unit where condensate can drain with sufficient fall to a suitable drainage point.
- Avoid locations where operating noise or cold air discharge may affect occupants or neighbouring properties.

6.2 Air Clearance

For optimal performance and to prevent damage, the heat pump requires a continuous supply of fresh air while operating.

The unit draws large volumes of ambient air through the rear and left-hand side, then discharges air through the front fan cowl. It must not be installed indoors or in an enclosed space unless adequate ventilation is provided, as this can reduce performance and may damage the unit.

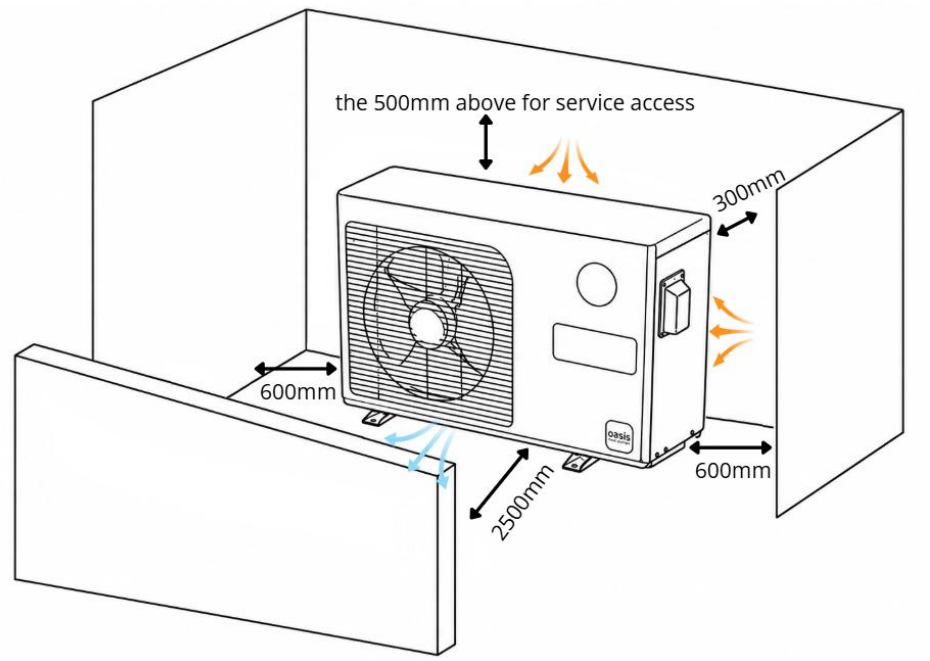

Minimum air clearance requirements

Important

In enclosed areas, discharged refrigerated air can recirculate back into the unit, reducing performance, efficiency and potentially causing the evaporator coil to ice up.

6.3 Optional Air Deflector

Oasis Heat Pumps offers an optional air deflector accessory for installations where the required front clearance cannot be achieved. When fitted, the Oasis air deflector reduces the front clearance requirement to 400mm, making it suitable for units facing a boundary fence or similar obstruction. Adequate clearance must still be maintained on all other sides to ensure unobstructed airflow and safe access for servicing.

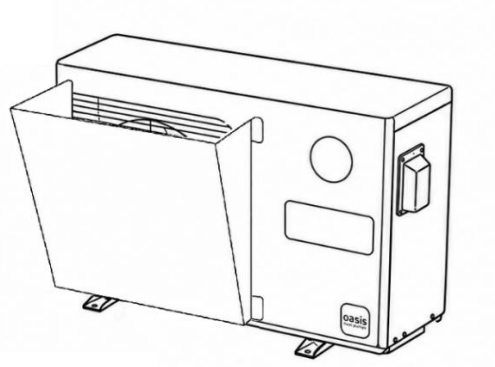

Optional air deflector

Notice

Air deflector mounting screws **must not exceed 20 mm** in length. Longer screws may puncture the evaporator fin coil, resulting in refrigerant leakage and equipment damage.

6.4 Mounting Surface

The heat pump must be installed on a solid, level base using the supplied anti-vibration feet. Installation on suitably rated wall brackets is acceptable, provided anti-vibration mountings are used.

Notice

Do not install the unit on surfaces subject to movement, subsidence or deterioration over time. Ensure the unit is adequately supported at all times and that no undue stress is applied to connected pipework.

6.5 Condensate Drainage

During operation, the heat pump will produce condensate (just like an air conditioner). This is normal, and condensate volumes may be significant in high-humidity conditions, particularly when the unit is operating in heating mode.

The heat pump must therefore be installed in a location that provides continuous fall to an appropriate drain, preventing water pooling and reducing slip hazards.

A condensate drain barb is supplied with the unit and should be fitted to the outlet hole under the left side of the base. The stepped barb accepts both 13mm and 19mm ID hose, allowing condensate to be directed to the drain.

6.6 Water Flow

The heat pump may be installed inline with the pool filtration system or on a dedicated heating circuit. When installed inline, it must be positioned after the filter and before the sanitiser and/or chemical dosing point.

Refer to the unit specifications to confirm that the selected pump and plumbing circuit can provide the required water flow.

A water bypass arrangement must be installed to allow the heat pump flow rate to be adjusted correctly.

6.7 Service Access

The unit must be installed in a location that provides safe access for routine maintenance, servicing, repairs and electrical isolation.

6.8 Multiple Unit Installations

Installations with multiple heat pumps require additional planning to ensure adequate air clearance, balanced water flow, correct plumbing layout and suitable electrical control arrangements. Refer to ***Appendix A - Multiple Unit Installations*** for further guidance.

Unpacking & Preparation

Warning

Installation must be carried out by appropriately trained and qualified personnel in accordance with all local regulations and the national wiring rules.

7.1 Unboxing

On receipt of the heat pump, inspect the packaging carefully. If any damage is visible, notify your supplier immediately and take photographs for future reference.

Remove the packing straps, then carefully lift the carton off the heat pump. Remove the protective plastic bag and locate the accessories supplied in the separate box within the packaging.

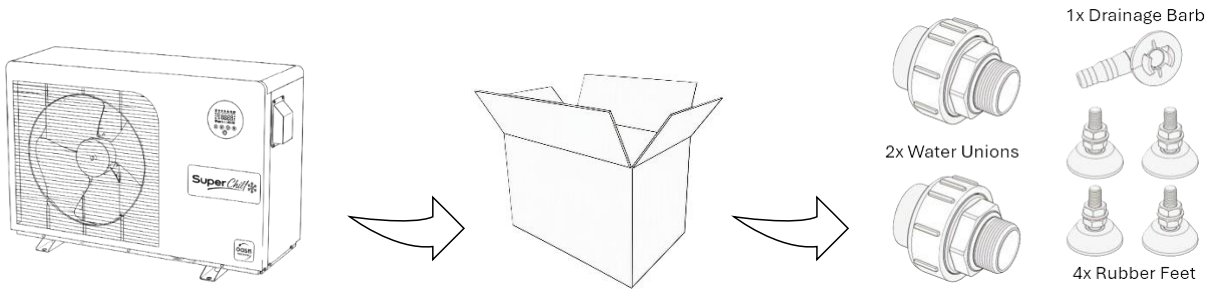

7.2 Assembly

Fit the four rubber feet to the unit. Then install the condensate drain barb into the outlet hole beneath the left-hand side of the base, removing the blanking grommet first *(if fitted)*.

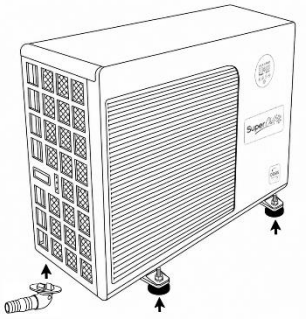

Tip

When mounting the heat pump on a wall bracket or similar fixture, the supplied feet are not required; however, the unit must be supported on suitable anti-vibration dampers.

Fit one large o-ring to each water union and apply a light coating of silicone grease to the rubber surface. Install each union and tighten firmly until the o-ring is fully compressed.

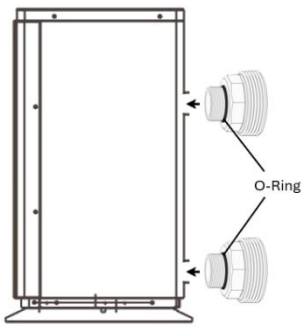

Notice

Oasis Heat Pumps recommends applying 3-4 wraps of white PTFE plumbing tape to these threads. Although the o-ring provides the primary seal, water hammer and lateral loads on the plumbing may compress the o-ring over time. Thread tape provides additional support and helps stabilise the connection.

7.3 Positioning & Levelling

Carefully position the heat pump on a level, stable mounting surface capable of supporting the weight of the unit.

Place a spirit level on the top lid and adjust or shim the feet as required until the unit sits level or preferably has a slight fall towards the condensate drain on the left-hand side.

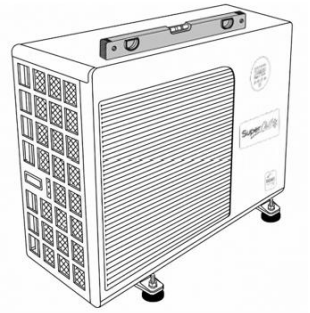

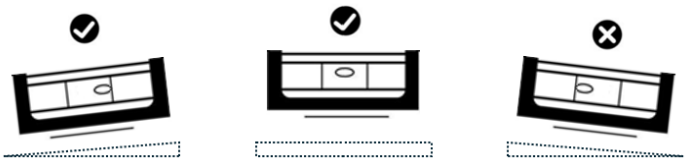

A slight fall towards the condensate drain is preferred

7.4 Condensate Management

Install the unit so condensate can drain through the condensate drain barb to a suitable drain. Connect a hose to the drain barb and route it with sufficient fall to allow water to flow freely without backing up.

Tip

When the system is used for water cooling, condensate may form on the cold water pipework in addition to the heat pump evaporator coil. In cooling applications, PVC pipework should be lagged to minimise condensation, and additional drainage provisions must be provided for any condensate that drips from the pipework, particularly in high ambient temperatures *(see **8.5 – Pipe Insulation**)*.

8.1 Configuration

The heat pump may be installed using either of the following arrangements:

Inline with filtration

The heat pump is fed water via the main filter pump, installed downstream of the filter and upstream of any sanitiser or chemical dosing equipment.

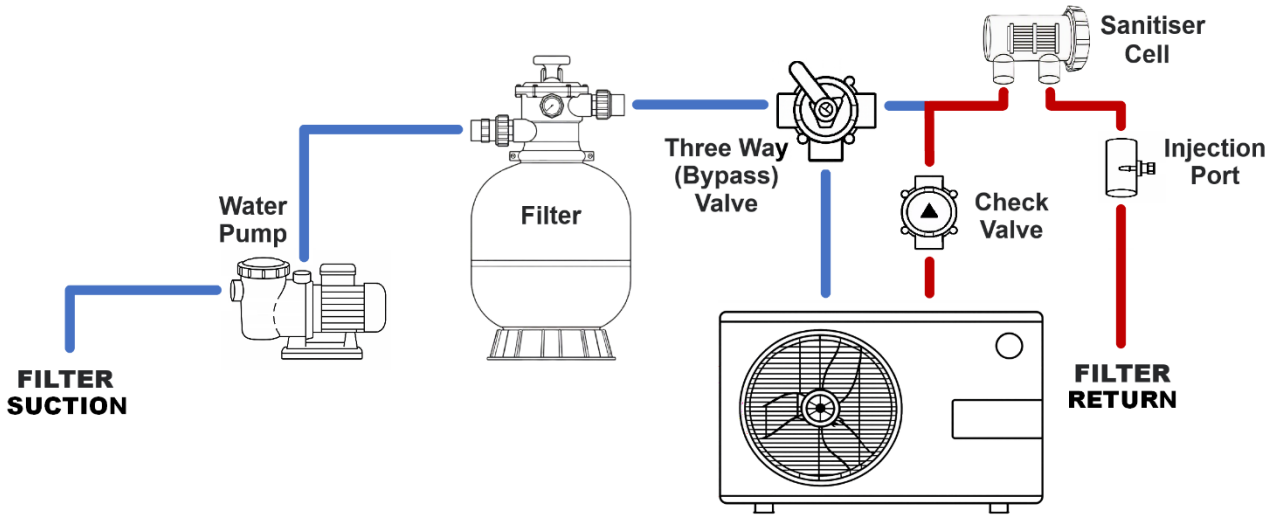

Independent heating circuit

The heat pump is fed water via a dedicated pump and plumbing circuit.

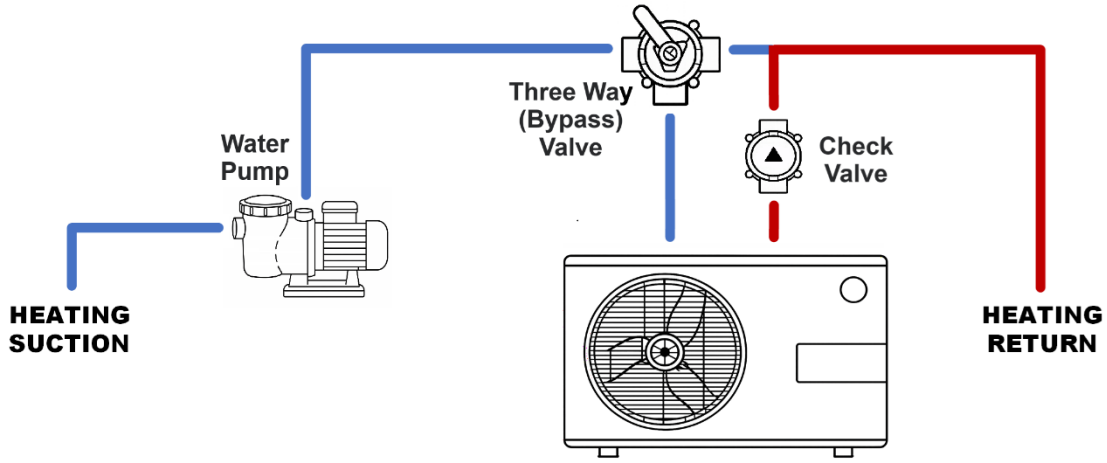

The unit can operate passively in response to water flow, or can command filter pump operation via a compatible Heat Junction device *(see **9.5 – Pump Control Wiring**)*.

Tip

For installations with multiple heat pumps, refer to ***Appendix A - Multiple Unit Installations***.

8.2 Connections

The heat pump must be connected to the pool or spa circulation system using correct plumbing practices to ensure reliable operation and to prevent damage to the heat exchanger.

- Water must enter through the bottom connection and exit through the top connection.
- The supplied water union tails are designed to accept 40 mm PVC-U pressure pipe.
- Pipe ends must be cut square, deburred, cleaned, primed and solvent welded using a suitable Type P pressure adhesive.
- Allow sufficient curing time in accordance with the adhesive manufacturer's instructions before pressurising the system.

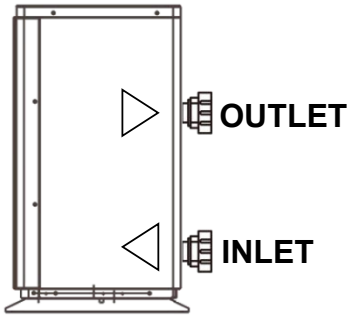

Notice

Prime the pipe only. Do not apply priming fluid to the union tails.

Tip

The external diameter of the union tails will accept 50 mm couplings; however, this is not recommended as it prevents removal of the union nuts for service and maintenance.

8.3 Water Flow Control

A bypass arrangement is required to correctly adjust water flow through the heat pump. This typically uses a three-way diverter valve to direct water through or around the unit, with a check valve fitted on the outlet side. The bypass also allows the heat pump to be isolated for servicing or repair.

Alternatively, three-way valves may be fitted to both the inlet and outlet circuits, with a bypass pipe installed between them.

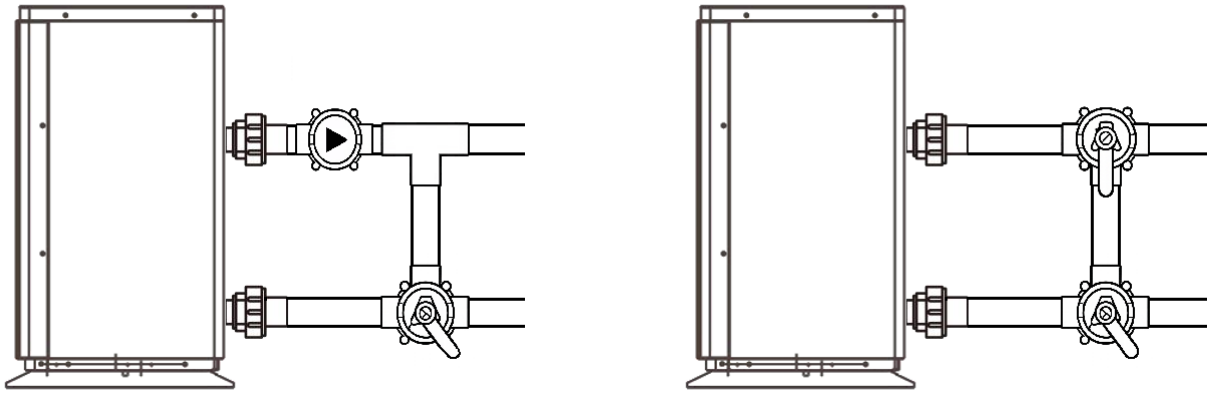

Typical water bypass examples

8.4 Support and Protection

All pipework must be **adequately supported** to prevent strain on the water unions. Do not allow lateral loads, misalignment or water hammer to be transferred to the connections.

8.5 Pipe Insulation (Chiller Applications)

In water cooling applications, the temperature of the circulated water may fall below ambient conditions, resulting in condensation forming on exposed pipework. To minimise this effect, all external pipework associated with the heat pump should be insulated using suitable foil-faced pipe lagging.

Insulation should be continuous along all exposed pipe runs and fitted in accordance with the manufacturer's recommendations to reduce condensation build-up and maintain system efficiency.

Condensation generated on insulated pipework and fittings must be appropriately managed to prevent water accumulation around the installation area.

- Provide adequate drainage beneath and around the heat pump and associated pipework.
- Ensure condensate can drain freely to a suitable discharge point.
- Take precautions to reduce slip hazards, particularly in high humidity or ambient temperature conditions.

⚠ **Caution**

Failure to adequately insulate pipework or manage condensate may result in excessive water accumulation, creating safety risks and potential damage to surrounding surfaces.

Electrical Safety

- The electrical installation must be completed by a qualified electrician in accordance with the AS/NZS 3000 Wiring Rules and local regulatory requirements.
- The heat pump must be connected to a dedicated sub-circuit which is 30mA RCD protected.
- A disconnection switch which has at least 3mm clearance in all poles must be incorporated in the fixed wiring.
- The appliance must be properly earthed.

9.1 Power Cable Selection

Notice

This table is provided as a guide only. Cable sizing must be assessed by a licensed electrician in accordance with the Wiring Rules and the specific requirements of the installation site. The data is based on typical installations with short cable runs.

Model	Electricity Supply *(Volts / Phase / Hz)*	Max Run Current *(amps)*	Power Cable *(mm²)*	Circuit Breaker *(amps)*
SCi2-8	220-240 / 1 / 50	18.5	3 x 4.0	25
SCi2-13	220-240 / 1 / 50	21.9	3 x 6.0	32
SCi2-17	220-240 / 1 / 50	27.4	3 x 6.0	32

9.2 Connection Terminals

Power Supply
For connection to incoming mains supply cable.

Pump Control Output (HJ Box)
Voltage-free output for control of a circulation pump via a compatible Heat Junction device, such as an Oasis pump controller or chlorinator.

Remote Input

Voltage-free input for ON/OFF control of the heat pump via a compatible automation system, such as the Oasis Smart controller. The circuit must be closed for the heat pump to operate.

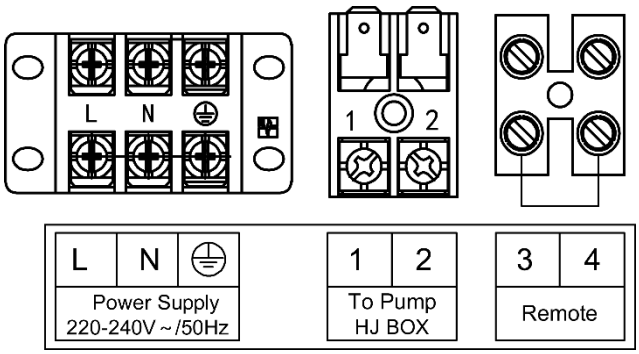

Electrical Connection Terminals
(13kW model shown)

Caution

The Pump Output and Remote Input terminals are for dry-contact connections only. Do not connect mains voltage to these terminals.

Tip

The fitment of wire ferrules to the ends of voltage-free connection cables, such as Heat Junction or Remote cables is recommended. This makes insertion into the terminals easier and helps provide a more reliable connection.

9.3 Power Supply Wiring

Access to the supply connection point is via the electrical access panel located on the side of the unit.

1. Remove the access panel to expose the electrical connection terminals.
2. Install a suitable conduit gland to one of the cable entry points.
3. Route the supply cable and flexible liquid-tight conduit through the gland and into the terminal enclosure.
4. Connect the active, neutral and earth conductors to the designated terminals in accordance with the wiring diagram.
5. Ensure that:
   - All terminals are securely tightened;
   - The cable is properly clamped to provide adequate strain relief; and
   - No exposed conductors are visible outside of the terminal connections.
6. Refit the electrical access panel securely and ensure the cable routing back to the isolating switch is correctly installed. Supply cabling must be adequately supported and protected from mechanical damage, and must be routed clear of sharp edges, hot surfaces and any moving components.

⚠ **Caution**

Do not drill, cut or modify the heat pump cabinet. Doing so may damage internal components, including refrigerant pipework or electrical wiring, and may void the warranty. Only use the designated cable entry points provided.

9.4 Earthing and Equipotential Bonding

The incoming mains protective earth conductor must be connected to the heat pump earth terminal.

Where equipotential bonding is required, the equipotential bonding conductor must be connected to the same heat pump earthing point using a terminal specifically rated for multiple conductors, or joined using a suitable approved earthing connector, such as a rated BP connector.

The connection must be mechanically secure, electrically continuous, accessible for inspection and protected against loosening or corrosion.

9.5 Pump Control Wiring

This dry-contact output allows the heat pump control logic to operate a water pump through a compatible Heat Junction device, such as an Oasis pump controller or chlorinator (cable supplied with the compatible device).

Warning

The electricity supply must be switched off and isolated prior to removing the access panel or making any connection.

1. Remove the electrical access panel located on the side of the unit to expose the electrical connection terminals.
2. Route the cable through one of the access panel grommets and connect the conductors to the 'Pump' screw terminals. Tighten both terminals securely and secure the cable to provide adequate strain relief.
3. Refit the electrical access panel securely. Route the cable back to the compatible controller neatly, ensuring it is kept clear of sharp edges, hot surfaces and moving components.

9.6 Remote Wiring

This dry-contact input allows a compatible automation system, such as the Oasis Smart controller, to provide ON/OFF control of the heat pump. Removing the factory-fitted wire loop from these terminals will inhibit heat pump operation. The loop is replaced with a two-core cable connected to the automation controller, which uses an internal relay to close the circuit when heat pump operation is required.

Warning

The electricity supply must be switched off and isolated prior to removing the access panel or making any connection.

1. Remove the electrical access panel located on the side of the unit to expose the electrical connection terminals.
2. Route the automation cable through one of the access panel grommets and connect the conductors to the 'Remote' screw terminals. Tighten both terminals securely and secure the cable to provide adequate strain relief.
3. Refit the electrical access panel securely. Route the cable back to the compatible controller neatly, ensuring it is kept clear of sharp edges, hot surfaces and moving components.

Tip

When the heat pump is first powered up, specific onboard settings are required to ensure that the heat pump will operate correctly in response to the remote command *(see **Appendix B – Automation & Remote Control** for detailed instructions)*.

10.1 Pre-Start Checklist

Before operating the heat pump for the first time, confirm that the installation has been completed correctly and complies with the requirements of this manual.

Ensure the following:

- The unit is installed in a suitable outdoor location with adequate airflow clearance;
- The unit is level, stable, and provisions have been made to direct condensate to a suitable drainage point;
- Plumbing is complete, all joints are fully cured, and a bypass arrangement is installed;
- The system can deliver the minimum required water flow in accordance with the model specifications; and
- All electrical connections have been completed in accordance with AS/NZS 3000 Wiring Rules, including installation of an accessible isolating switch.

⚠ **Caution**

Do not operate the heat pump until all of the above conditions have been met.

10.2 Initial Start-Up

Prior to starting the heat pump, ensure the pool or spa is adequately filled with water and that the circulation pump is fully primed.

1. Set the bypass valve to allow full flow through the heat pump.
2. If the heat pump is not controlling the circulation pump, ensure the pump is manually switched on to provide water flow.
3. Switch on the heat pump electrical supply at the isolating switch and wait for the display to illuminate.
4. Tap the **Power** ⏻ key to switch on the heat pump.
5. Tap the **Mode** M key to select the desired operating mode (Heating, Cooling or Auto).
6. Use the **Up** and **Down** keys △ ▽ to select the desired water temperature, then tap the **Power** ⏻ key to confirm the setting.
7. Tap and hold the **Mode** M key for 3 seconds to change the performance mode to **Powerful**, which is indicated by a P icon. If the **Silent** or **Smart** icon is displayed, repeat until the P icon is displayed.

Tip

The display will be automatically locked after 60 seconds of inactivity (padlock icon displayed).
Tap and hold the **Power** key for 3 seconds to unlock.

10.3 Start-Up Sequence

When the heat pump is switched on, the following sequence will occur:

- The unit performs internal diagnostics and system checks for approximately **60 seconds**. During this time, the heat pump may appear to be inactive;
- The circulation pump is then activated via the Heat Junction output cable *(if equipped)*, indicated by the **pump**  icon.
- The heat pump samples water temperature for 60 seconds to determine if heating or cooling is required. The current inlet water temperature is displayed in the centre of the display.

  Note: If the sampled temperature is within 1°C of the setpoint temperature, the heat pump will enter standby and sample again after 20 minutes. For commissioning purposes, adjust the setpoint temperature so it is more than 1°C from the current inlet temperature, then isolate power for 60 seconds to recommence the start-up sequence.

- If the sampled inlet water temperature **is 1°C or more beyond the setpoint**, the fan will start, indicated by the **fan** 

icon.
- After 30 seconds, the compressor will start, indicated by the **compressor**  icon, and heating or cooling will commence.

Tip

If no water flow is detected within 60 seconds of the sampling period starting, the unit will stop and display an E03 fault message. This will clear automatically once adequate water flow is restored.

10.4 Calculating Target Temperature Differential

Correct water flow must be established to ensure efficient operation and prevent fault conditions. For optimal performance, the inlet – outlet temperature differential should typically be between 1.0°C and 2.0°C, depending on ambient operating conditions.

Use the chart below to calculate the appropriate inlet – outlet temperature differential target during initial commissioning.

Target Temperature Differential

Application	*Summer*	*Spring / Autumn*	*Winter*
Water Cooling	1.0 ~ 1.5°C	1.2 ~ 1.8°C	1.5 ~ 2.0°C
Water Heating	1.5 ~ 2.0°C	1.2 ~ 1.8°C	1.0 ~ 1.5°C

10.5 Water Flow Adjustment (Bypass Setting)

Set the water flow as follows:

1. Allow the heat pump to operate in Powerful (P) performance mode for approximately 15 minutes before making any flow adjustments.
2. Unlock the display, then tap and hold the **Down** (▽) key for 3 seconds. Parameter **A01** will be displayed – **Inlet Water Temperature**. Take note of this value.
3. Tap the **Up** (△) key and Parameter **A02** will be displayed – **Outlet Water Temperature**.
4. Calculate the difference between the **A01** and **A02** temperature; this is your inlet – outlet differential. Compare the differential against the chart in ***Section 10.4*** (previous page) to determine the target range.

   *As an example, during **summer** ambient temperatures, operating in **cooling mode**, the optimal water flow rate after 15 minutes of continuous operation will provide an inlet – outlet differential of between 1.0°C and 1.5°C.*

5. Adjust the bypass valve *(or variable pump speed – where applicable)* until the required temperature differential is achieved.
   - **More water flow = lower temperature differential**
   - **Less water flow = higher temperature differential**
6. Tap the **Power** (⏻) key to return to the home screen.

Tip

The display will automatically exit the parameter menu and return to the home screen after 60 seconds of no key activity.

10.6 User Settings

Once commissioning and flow adjustment are complete, set the time and any other desired operating parameters as outlined in ***Section 11 – Controller Operation***.

11.1 Control Panel Overview



Keys	
	ON / OFF
M	Mode
△	Up
▽	Down
	Timer

Mode Symbols	
	Heating
	Cooling
AUTO	Automatic
P	Powerful
	Smart
	Silent

Other Symbols	
	Water Pump
FAN	Fan
	Compressor
	Defrosting
	Message
	Display Locked

11.2 Key Functions

Unlocking the display

The display automatically locks after 60 seconds of inactivity, indicated by the Lock icon .

Tap and hold the **Power**  key for 3 seconds to unlock the display.

Switching the unit ON and OFF

Tap the **Power**  key to switch the heat pump on or off.

When switched on, the controller will display the current operating and performance mode icons. When switched off, these two icons will disappear.

Changing the operating mode

The heat pump can operate in three modes. Tap the **Mode**  key to cycle through the available operating modes:

 **Heating Mode**	The circulating water is heated until the set temperature is reached. It then periodically samples the water temperature and restarts heating if the temperature falls more than 1.0°C below the setpoint.
 **Cooling Mode**	The circulating water is cooled until the set temperature is reached. It then periodically samples the water temperature and restarts cooling if the temperature rises more than 1.0°C above the setpoint.
 **Automatic Mode**	The circulating water is heated or cooled until the set temperature is reached. It then periodically samples the water temperature and restarts heating or cooling if the temperature drifts more than 1.0°C above or below the setpoint.

Changing the desired water temperature

Use the **Up** and **Down** keys  to select the desired water temperature, then tap the **Power**  key to confirm the setting.

11.3 Performance Modes

The heat pump has three performance modes which provide different levels of output. Tap and hold the **Mode** (M) key for 3 seconds to cycle through the available operating modes:

(P) **Powerful Mode**	Provides maximum heating or cooling capacity and is recommended during commissioning and initial temperature pull-down or heat-up.
Smart Mode	Automatically adjusts operating capacity to balance performance and energy consumption under varying conditions.
Silent Mode	Reduces fan and compressor output to minimise operating noise. This reduced performance mode is recommended when low noise operation is required, such as when operating the unit at night.

11.4 Clock

Setting the clock

Tap the **Clock** key to enter the clock setting menu. The hour value will flash first.

Use the **Up** and **Down** keys to adjust the hour and tap the **Clock** key to confirm.

The minutes will now flash. Use the **Up** and **Down** keys to adjust the minutes and tap the **Clock** key to save.

Tip

The clock uses 24-hour time. For example, 1:30 pm should be entered as 13:30.

11.5 Run Timers

Setting the run timer

The controller supports up to three programmable ON – OFF timer periods.
When run timers are activated, the display will show ON and/or OFF icons, along with the number 1, 2 or 3 (dependent on how many run timers have been set).

Tap and hold the **Clock** key for 3 seconds to enter the run timer menu. The display will show ON 1 and the Timer 1 ON hours will be flashing. Use the **Up** and **Down** keys to adjust the ON hour and tap the **Clock** key to confirm. The ON minutes will now flash.

Use the **Up** and **Down** keys to adjust the ON minutes and tap the **Clock** key to save the setting. Now the display will show OFF 1 and the Timer 1 **OFF** hours will be flashing.

Use the **Up** and **Down** keys to adjust OFF hour and tap the **Clock** key to confirm.

The OFF minutes will now flash. Use the **Up** and **Down** keys to adjust the minutes and tap the **Clock** key to save the **Timer 1** settings.

If only one run period is desired, tap the **Power** key to save and exit.

Setting additional run timers

After setting Timer 1, tap the **Clock** key to continue forward and the display will show ON 2 and the Timer 2 **ON** hours will be flashing. Continue to set the ON and OFF times to activate Timer 2 *(and again to set Timer 3 – if desired)*. Tap the **Power** key to save and exit at any time.

Removing run timers

To cancel and remove a timer period, set the ON and OFF times to the exact same value (e.g. 00:00). Tap the **Power** key to save and exit.

Run Timer Icons *(displayed on the home screen)*			
ON 1 OFF	One timer period has been set	ON 1	Only the ON timer has been set
ON 1 OFF 2	Two timer periods have been set	1 OFF	Only the OFF timer has been set
ON 1 3 OFF 2	Three timer periods have been set		No timers are set

11.6 System Parameters

The controller allows access to a range of operating parameters including water temperatures, sensor readings and system status information.

Tap and hold the **Down** key for 3 seconds to enter the system parameters menu. The display will show **A01** *(inlet water temperature)* in the bottom right corner, with the corresponding value above.

Use the **Up** and **Down** keys to cycle through the list of parameters.

The display will automatically exit the parameter menu and return to the home screen after 60 seconds of no key activity. Alternatively, tap the **Power** key to exit at any time.

System Parameter	Description
A01	Water inlet temperature
A02	Water outlet temperature
A03	Ambient temperature
A04	Exhaust temperature
A05	Suction temperature
A06	Heating coil temperature
A07	Cooling coil temperature
A08	Main EEV steps
A09	EEV Steps of EVI
A10	Compressor current
A11	IPM temperature
A12	Detected DC bus voltage
A13	Compressor speed
A14	DC fan speed
A15	Main PCB version
A16	Fault record 1 (most recent)
A17	Fault record 2
A18	Fault record 3
A19	Fault record 4
A20	Fault record 5

Tip

Parameters A01 and A02 must be reviewed to check and adjust the water flow rate for optimum performance *(see **10.5 – Water Flow Adjustment**)*.

11.7 Other Features

Automatic Defrost

When operating in heating mode during low ambient temperatures, frost may form on the evaporator coil. The heat pump will automatically enter a defrost cycle when required.

During defrost operation, the following sequence will occur:

- The defrost  icon will flash;
- Heating output is temporarily suspended while the unit changes to reverse cycle;
- Fan and compressor operation may change; and
- The evaporator coil will quickly warm to melt the accumulated frost.

Once the frost melts, the unit will automatically resume heating operation.

Tip

A visible plume of vapour may be produced during defrost as accumulated frost melts and evaporates from the evaporator coil. This is a normal part of the automatic defrost process and may appear more noticeable in cool or humid conditions. The vapour will clear once the defrost cycle is complete and the heat pump returns to normal heating operation.

Changing Temperature Units

The display can be switched between Celsius (°C) and Fahrenheit (°F).
To change the setting, the heat pump must be switched to OFF *(e.g. no mode displayed at top of display)*.

Tap and hold the **Power**  and **Mode**  keys simultaneously for 3 seconds.

12.1 Routine Maintenance

Regular maintenance is essential to ensure safe, reliable, and efficient operation of the heat pump. Routine inspection and servicing will help maintain performance, extend service life, and allow early detection of issues such as water leaks that may lead to equipment damage.

Pool environments in Australia and New Zealand often contain elevated levels of salt and minerals, which can accelerate corrosion of metal components if leaks are not promptly identified and rectified.

Heat pumps operate by extracting heat from the surrounding air, which results in moisture being condensed on the evaporator fin coil during normal operation (much like an air conditioner). This results in the production of significant volumes of condensate water, and the condensate drainage system must be regularly inspected and maintained to prevent blockages and internal water accumulation. During peak operation the unit may discharge several litres of condensate per hour.

Refer to the maintenance schedule in this section for recommended service intervals and required inspection tasks.

12.2 Finding a Service Agent

Routine maintenance, servicing, and repair of your heat pump can be carried out by an authorised Oasis Heat Pumps service agent. Many qualified local refrigeration and air conditioning technicians can also provide general heat pump servicing.

To locate a service provider in your area, visit **sunloverheating.com.au** and submit a service request.

12.3 Maintenance Schedule

Every 3 Months *(user or pool technician inspection)*

- Remove leaves, grass, and debris from the exterior of the heat pump and surrounding area.
- Visually inspect all plumbing and electrical cables for signs of wear or physical damage. Check to ensure there is no water leakage around all pipes and fittings.
- Operate the heat pump in heating mode until a sample of condensate water can be collected from the drain outlet. Test using a pool test strip to confirm the discharge is fresh water and free from chlorine or other pool chemicals.
- Compare against a pool water sample if required. **If chlorine, salt or other pool treatment chemicals are detected, immediately shut down the unit and arrange for service.**
- Treat the area surrounding the heat pump and pool equipment with a suitable outdoor surface spray to minimise pest and insect activity.

12.4 Maintenance Schedule *(continued)*

Every 6 Months *(user or pool technician inspection)*

[in addition to 3-month schedule]

- Inspect and clear any debris from the condensate drain barb and hose *(where equipped)*.
- Check the unit is installed level using a spirit level placed on the top panel. The unit should be level or slightly sloped towards the condensate drain *(left-hand side)*.

  Important: If the unit slopes toward the right-hand side, water may pool around the compressor and fail to drain correctly, resulting in reduced service life.
- Adjust the height of the cabinet feet or install packers as required to achieve correct alignment.

Every 12 Months *(professional technician inspection)*

[in addition to 3-month & 6-month schedules]

- Inspect the two-piece barrel unions at the rear of the unit.
  - Lubricate and tighten inner and outer threads.
  - Check for any signs of water leakage and repair as required.
- Isolate electrical power before removing the lid and front panel assemblies.
- Inspect all electrical connections for signs of deterioration, corrosion, or damage.
- Check for any signs of water leakage from the heat exchanger assembly. Inspect and tighten fittings and flow switch as required.
- Clean the evaporator coil and base pan using a suitable coil cleaner, then rinse with fresh water.
- Remove and clean the condensate drain barb.
- Clean the cabinet using a mild detergent and damp cloth.
- Reassemble the unit and restore power.
- Clear any error codes if present.
- Operate the unit for at least 15 minutes.
- Check and adjust the bypass valve *(see **10.5 – Water Flow Adjustment**)*.
- Verify all user settings to confirm correct operation.

13.1 Introduction

Warning

This section is laid out in accordance with AS/NZS 60335.2.40. It is intended only for qualified service technicians, refrigeration and electrical service personnel. Do not attempt to service or repair this appliance unless you are appropriately trained and qualified.

13.2 General Work Requirements

Caution

All work must be carried out:

- Under controlled conditions;
- With appropriate risk assessment; and
- In accordance with manufacturer instructions and regulatory requirements.

Avoid work in confined spaces unless adequate ventilation is provided.

Electrical Safety

Initial Electrical Safety Checks Shall Include:

- That the electrical supply circuit is switched off, isolated and tested to confirm that there is no voltage present;
- That capacitors are discharged: this shall be done in a safe manner to avoid the possibility of sparking;
- That no live electrical components and wiring are exposed while charging, recovering, or purging the system; and
- That there is continuity of the earth bonding.

13.3 Checks to the Area

Prior to beginning work on systems containing flammable refrigerants, safety checks are necessary to ensure that the risk of ignition is minimised. For repairs to the refrigerating system, Steps **13.4 – 13.8** shall be completed prior to conducting work on the system.

Warning

Avoid work in confined spaces unless adequate ventilation is provided.

13.4 Work Procedure

Work shall be undertaken under a controlled procedure so as to minimise the risk of a flammable gas or vapour being present while the work is being performed.

13.5 General Work Area

All maintenance staff and others working in the local area shall be instructed on the nature of work being carried out. Work in confined spaces shall be avoided.

13.6 Checking for Presence of Refrigerant

The area shall be checked with an appropriate refrigerant detector prior to and during work, to ensure the technician is aware of potentially flammable atmospheres. Ensure that the leak detection equipment being used is suitable for use with flammable refrigerants, i.e. non-sparking, adequately sealed or intrinsically safe.

13.7 Presence of a Fire Extinguisher

If any hot work is to be conducted on the refrigerating equipment or any associated parts, appropriate fire extinguishing equipment shall be available to hand. Have a dry powder or CO_2 fire extinguisher adjacent to the charging area.

13.8 No Ignition Sources

No person carrying out work in relation to a refrigeration system which involves exposing any pipework that contains or has contained flammable refrigerant shall use any sources of ignition in such a manner that it may lead to the risk of fire or explosion. All possible ignition sources, including cigarette smoking, should be kept sufficiently far away from the site of installation, repairing, removing and disposal, during which flammable refrigerant can possibly be released to the surrounding space. Prior to work taking place, the area around the equipment is to be surveyed to make sure that there are no flammable hazards or ignition risks. "No Smoking" signs shall be displayed.

13.9 Checks to the Refrigeration Equipment

Where electrical components are being changed, they shall be fit for the purpose and to the correct specification. At all times the manufacturer's maintenance and service guidelines shall be followed. If in doubt consult the manufacturer's technical department for assistance. The following checks shall be applied to installations using flammable refrigerants:

- The charge size is in accordance with the room size within which the refrigerant containing parts are installed;
- The ventilation machinery and outlets are operating adequately and are not obstructed;
- If an indirect refrigerating circuit is being used, the secondary circuit shall be checked for the presence of refrigerant;
- Marking to the equipment continues to be visible and legible. Markings and signs that are illegible shall be corrected;
- Refrigeration pipe or components are installed in a position where they are unlikely to be exposed to any substance which may corrode refrigerant containing components, unless the components are constructed of materials which are inherently resistant to being corroded or are suitably protected against being so corroded.

13.10 Checks to Electrical Devices

Repair and maintenance to electrical components shall include initial safety checks and component inspection procedures. If a fault exists that could compromise safety, then no electrical supply shall be connected to the circuit until it is satisfactorily dealt with. If the fault cannot be corrected immediately but it is necessary to continue operation, an adequate temporary solution shall be used. This shall be reported to the owner of the equipment, so all parties are advised.

Initial safety checks shall include:

- That capacitors are discharged: this shall be done in a safe manner to avoid possibility of sparking;
- That no live electrical components and wiring are exposed while charging, recovering or purging the system; and
- That there is continuity of earth bonding.

13.11 Repairs to Sealed Components

Sealed electrical components shall not be repaired.

13.12 Cabling

Check that cabling will not be subject to wear, corrosion, excessive pressure, vibration, sharp edges or any other adverse environmental effects. The check shall also take into account the effects of ageing or continual vibration from sources such as compressors or fans.

13.13 Detection of Flammable Refrigerants

Under no circumstances shall potential sources of ignition be used in the searching for or detection of refrigerant leaks. A halide torch (or any other detector using a naked flame) shall not be used.

The following leak detection methods are deemed acceptable for systems containing flammable refrigerants:

- Electronic leak detectors shall be used to detect flammable refrigerants but, in the case of flammable refrigerants, the sensitivity can be inadequate, or can need re-calibration. (Detection equipment shall be calibrated in a refrigerant-free area.) Ensure that the detector is not a potential source of ignition and is suitable for the refrigerant used. Leak detection equipment shall be set at a percentage of the LFL of the refrigerant and shall be calibrated to the refrigerant employed, and the appropriate percentage of gas (25 % maximum) is confirmed.
- Leak detection fluids are suitable for use with most refrigerants but the use of detergents containing chlorine shall be avoided as the chlorine may react with the refrigerant and corrode the copper pipework.

  NOTE: Examples of leak detection methods are:

  a. Bubble method,
  b. Fluorescent agent method.

13.13 Detection of Flammable Refrigerants *(continued)*

If a leak is suspected, all naked flames shall be removed/extinguished.

If a leakage of refrigerant is found which requires brazing, all of the refrigerant shall be recovered from the system, or isolated (by means of shut off valves) in a part of the system remote from the leak. Removal of the refrigerant shall be according to step ***13.14*** (below).

13.14 Refrigerant Removal and Circuit Evacuation

When breaking into the refrigerant circuit to make repairs, or for any other purpose, conventional procedures shall be used. However, it is important that best practice is used since flammability is a consideration.

The following procedure shall be adhered to:

1. Safely remove refrigerant following local and national regulations;
2. Evacuate;
3. Purge the circuit with dry nitrogen;
4. Evacuate;
5. Continuously flush with dry nitrogen when using flame to open circuit;
6. Open the circuit.

The refrigerant charge shall be recovered into the correct recovery cylinders.

Purging of the refrigerant circuit shall be achieved by breaking the vacuum in the system with dry nitrogen and continuing to fill until the working pressure is achieved, then venting to atmosphere, and finally pulling down to a vacuum. This process shall be repeated until no refrigerant is within the system. When the final dry nitrogen charge is used, the system shall be vented down to atmospheric pressure to enable work to take place. This operation is absolutely vital if brazing operations on the pipework are to take place.

Ensure that the outlet for the vacuum pump is not close to any ignition sources and there is ventilation available.

13.15 Charging Procedures

In addition to conventional charging procedures, the following requirements shall be followed:

1. Ensure that contamination of different refrigerants does not occur when using charging equipment. Hoses or lines shall be as short as possible to minimise the amount of refrigerant contained in them. Cylinders shall be kept upright;
2. Ensure that the refrigeration system is earthed prior to charging the system with refrigerant;
3. Label the system when charging is complete (if not already). Purge the circuit with dry nitrogen;
4. Extreme care shall be taken not to overfill the refrigeration system. Prior to recharging the system, it shall be pressure tested with dry nitrogen. The system shall be leak tested on completion of charging but prior to commissioning. A follow up leak test shall be carried out prior to leaving the site.

13.16 Decommissioning

Before carrying out this procedure, it is essential that the technician is completely familiar with the equipment and all its detail. It is recommended good practice that all refrigerants are recovered safely. Prior to the task being carried out, an oil and refrigerant sample shall be taken in case analysis is required prior to re-use of recovered refrigerant. It is essential that electrical power is available before the task is commenced.

1. Become familiar with the equipment and its operation.
2. Isolate system electrically.
3. Before attempting the procedure ensure that:
    a. Mechanical handling equipment is available, if required, for handling refrigerant cylinders;
    b. All personal protective equipment is available and being used correctly;
    c. The recovery process is supervised at all times by a competent person;
    d. Recovery equipment and cylinders conform to the appropriate standards.
4. Pump down refrigerant system, if possible.
5. If a vacuum is not possible, make a manifold so that refrigerant can be removed from various parts of the system.
6. Make sure that cylinder is situated on the scales before recovery takes place.
7. Start the recovery machine and operate in accordance with manufacturer's instructions.
8. Do not overfill cylinders. (No more than 80 % volume liquid charge).
9. Do not exceed the maximum working pressure of the cylinder, even temporarily.
10. When the cylinders have been filled correctly and the process completed, make sure that the cylinders and the equipment are removed from site promptly and all isolation valves on the equipment are closed off.
11. Recovered refrigerant shall not be charged into another refrigeration system unless it has been cleaned and checked.

13.17 Labelling

Equipment shall be labelled stating that it has been decommissioned and emptied of refrigerant. The label shall be dated and signed. Ensure that there are labels on the equipment stating the equipment contains flammable refrigerant.

13.18 Recovery

When removing refrigerant from a system, either for servicing or decommissioning, it is required that all refrigerants are removed safely.

When transferring refrigerant into cylinders, ensure that only appropriate refrigerant recovery cylinders are employed. Ensure that the correct number of cylinders for holding the total system charge are available.

All cylinders to be used are designated for the recovered refrigerant and labelled for that refrigerant (i.e. special cylinders for the recovery of refrigerant).

Cylinders shall be complete with pressure relief valve and associated shut-off valves in good working order.

Empty recovery cylinders are evacuated and, if possible, cooled before recovery occurs.

The recovery equipment shall be in good working order with a set of instructions concerning the equipment that is at hand and shall be suitable for the recovery of flammable refrigerant. Consult manufacturer if in doubt. In addition, a set of calibrated weighing scales shall be available and in good working order. Hoses shall be complete with leak-free disconnect couplings and in good condition.

Before using the recovery machine, check that it is in satisfactory working order, has been properly maintained and that any associated electrical components are sealed to prevent ignition in the event of a refrigerant release. Consult manufacturer if in doubt.

The recovered refrigerant shall be processed according to local legislation in the correct recovery cylinder, and the relevant waste transfer note arranged. Do not mix refrigerants in recovery devices and especially not in cylinders.

If compressors or compressor oils are to be removed, ensure that they have been evacuated to an acceptable level to make certain that flammable refrigerant does not remain within the lubricant. The compressor body shall not be heated by an open flame or other ignition sources to accelerate this process. Draining of oil from a system shall be carried out safely.

14.1 Service Access

Removing the top lid

1. Remove the two screws from the left-hand side of the cabinet, as shown.
2. Slide the lid to the left to disengage the holding tabs.
3. Lift the top lid and set aside safely to prevent damage.

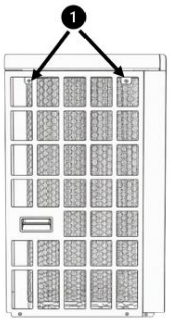

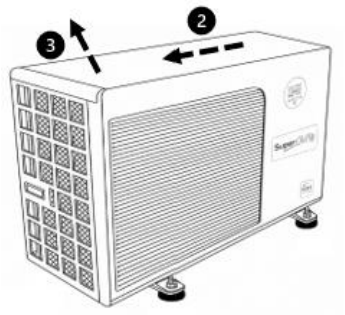

Removing the outer front panel

1. Reaching in from above, disconnect the touch screen controller plug from the back of the panel.
2. Remove the screws from the top, bottom and sides of the outer panel, as shown.
3. Firmly lift up the panel to disengage the holding tabs and set aside safely to prevent damage.

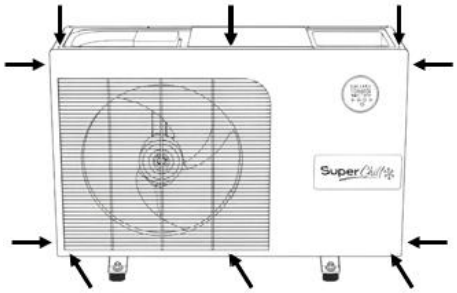

Removing the inner front panel

1. Remove the screws from the top and sides of the inner panel, as shown.
2. Remove the panel and set aside safely to prevent damage.

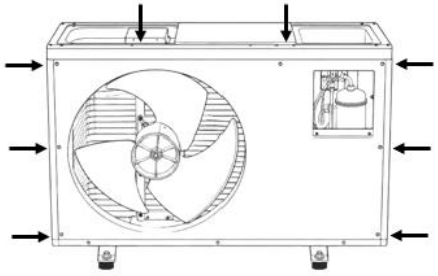

Reassembling the unit

1. Once servicing is complete, refit the front panels and top lid in the reverse order of removal.
2. Verify all user settings to confirm correct operation.

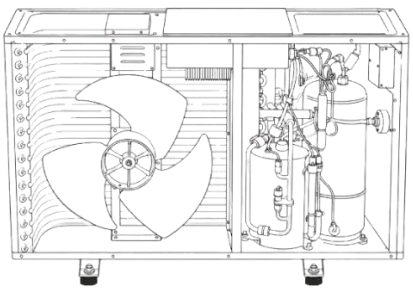

14.2 Exploded Parts Views

Oasis SCi2--8

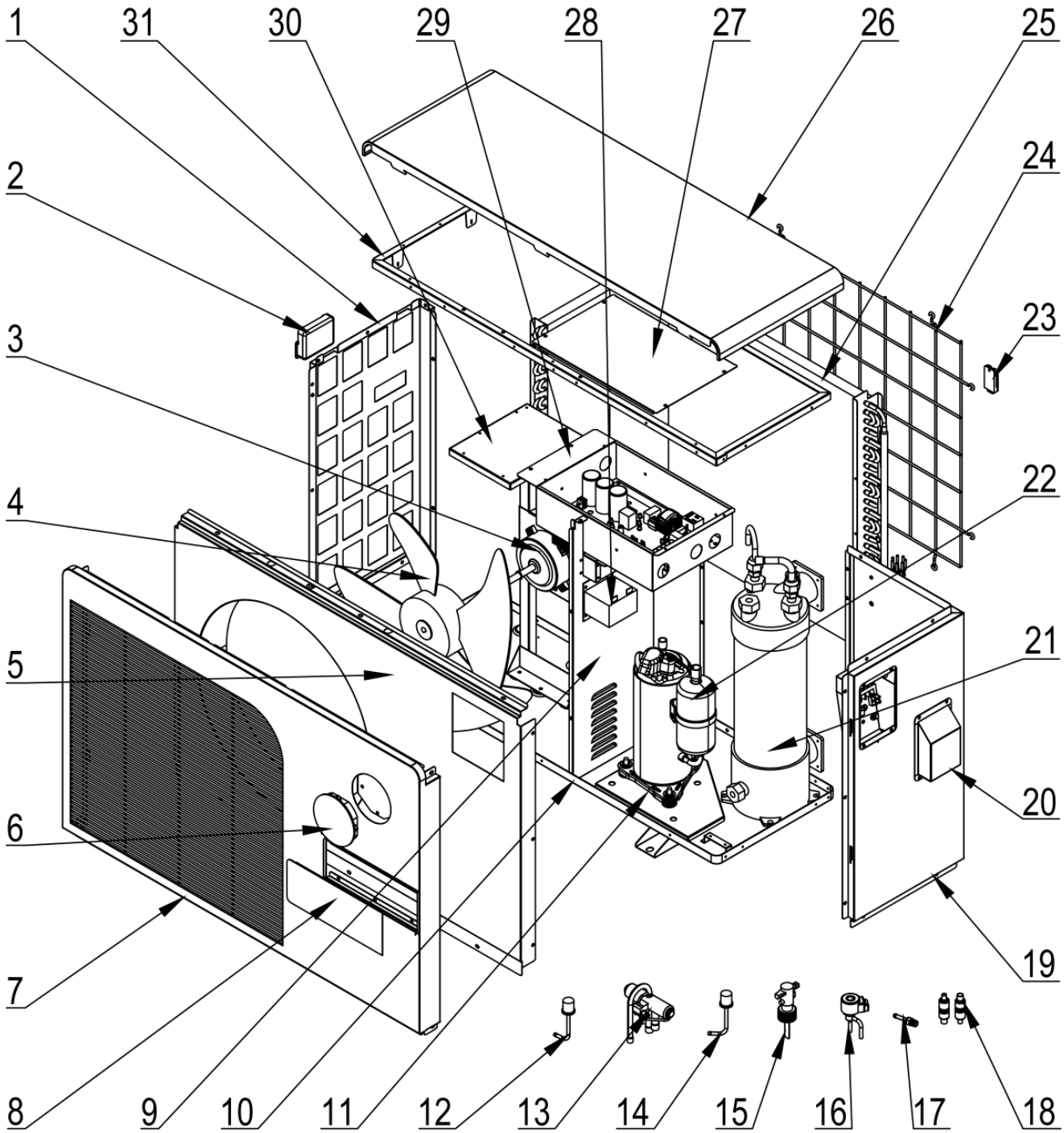

14.2 Exploded Parts Views *(continued)*

Oasis SCi2--8

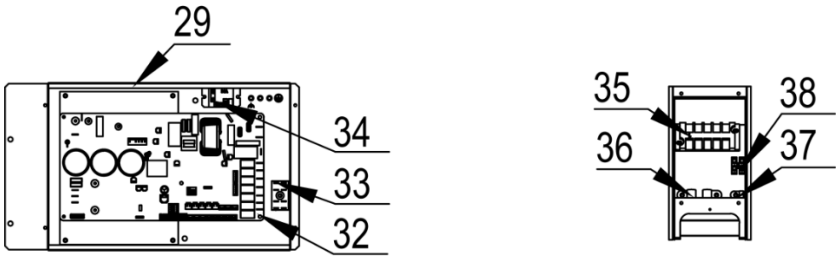

No.	Description	No.	Description
1	Left Net	20	Junction Box Cover
2	Left Handle	21	Titanium Heat Exchanger
3	DC Fan Motor	22	Compressor
4	Fan Blade	23	Ambient Temp. Sensor Holder
5	Inner Front Plate	24	Rear Net
6	Wired Controller	25	Finned Heat Exchanger
7	Outer Front Plate	26	Top Cover Welding Assembly
8	Decorative Plate	27	Electrical Box Cover
9	Median Septum Assembly	28	Reactor
10	Chassis Welding Assembly	29	Electrical Box
11	Suspension Chassis	30	Motor Support Assembly
12	High Pressure Switch	31	Internal Fixed Frame
13	4-Way Valve	32	Main Board
14	Low Pressure Switch	33	2U Terminal Blocks
15	Water Flow Switch	34	Relay
16	EEV	35	5-Pole Terminal Board
17	Needle Valve	36	9.5mm Cable Clamp
18	Refrigerant Filter	37	3.2mm Cable Clamp
19	Right Plate Assembly	38	2-Pole Terminal Board

14.2 Exploded Parts Views *(continued)*

Oasis SCi2--13

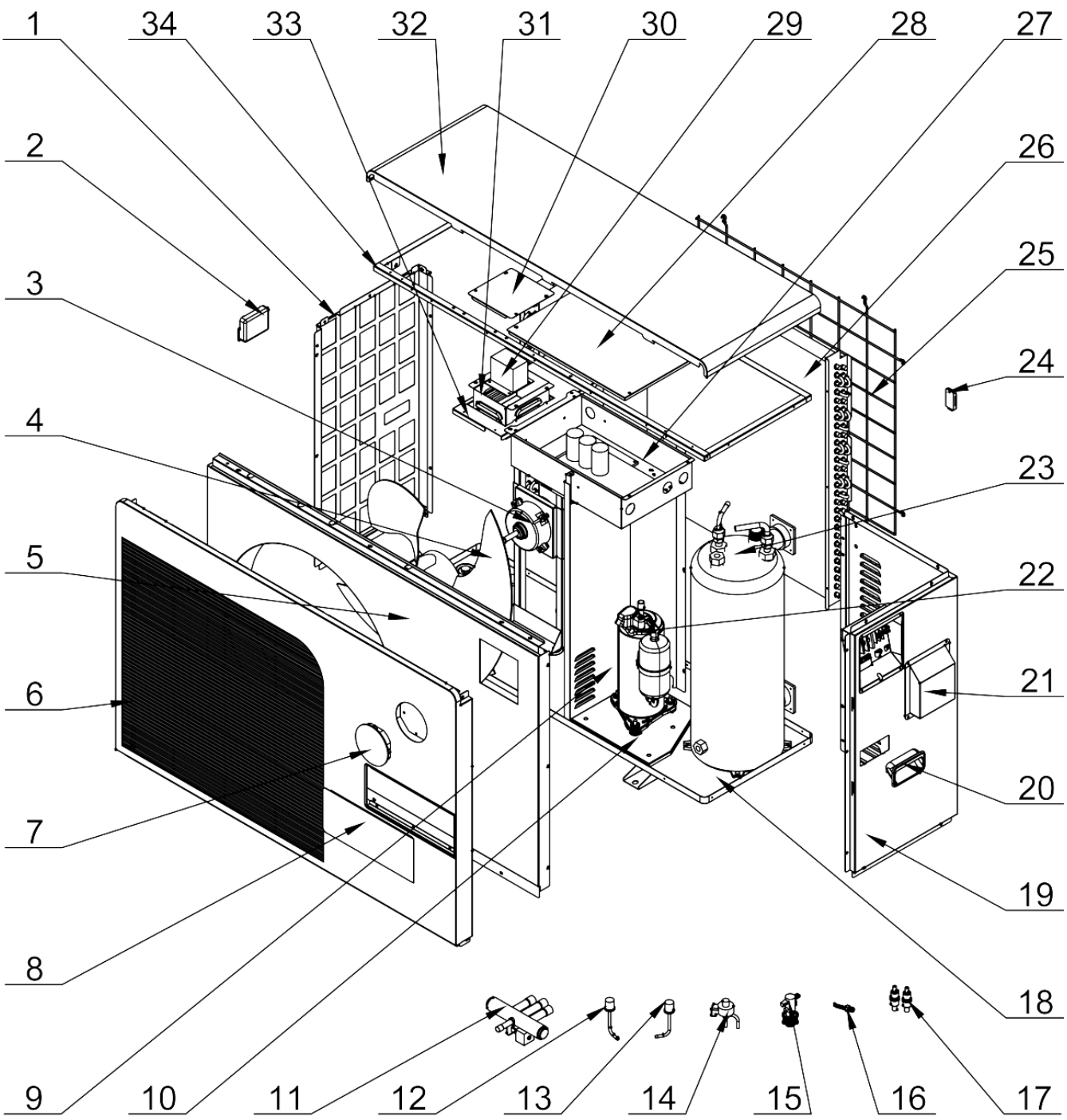

14.2 Exploded Parts Views *(continued)*

Oasis SCi2--13

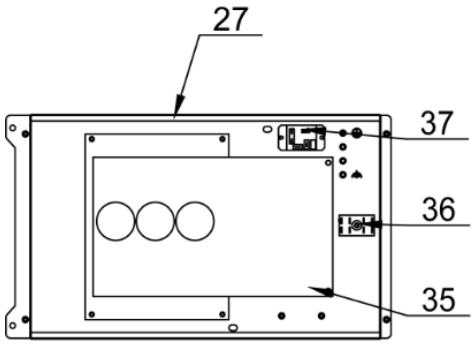

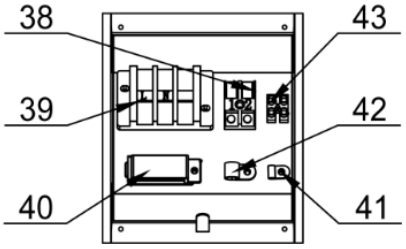

No.	Description	No.	Description
1	Left Net	23	Titanium Heat Exchanger
2	Left Handle	24	Ambient Temp. Sensor Holder
3	DC Fan Motor	25	Rear Net
4	Fan Blade	26	Finned Heat Exchanger
5	Inner Front Plate	27	Electrical Box
6	Outer Front Plate	28	Electrical Box Cover
7	Wired Controller	29	Reactor
8	Decorative Plate	30	Reactor Box Cover
9	Median Septum	31	Reactor Box
10	Suspension Chassis	32	Top Cover
11	4-Way Valve	33	Motor Support
12	High Pressure Switch	34	Internal Fixed Frame
13	Low Pressure Switch	35	Main Board
14	EEV	36	2U Terminal Block 1
15	Water Flow Switch	37	Relay
16	Needle Valve	38	2U Terminal Block 2
17	Refrigerant Filter	39	3-Pole Terminal Board
18	Chassis	40	Cable Clip
19	Right Plate	41	3.2mm Cable Clamp
20	Right Handle	42	9.5mm Cable Clamp
21	Junction Box Cover	43	2-Pole Terminal Board
22	Compressor		

14.2 Exploded Parts Views *(continued)*

Oasis SCi2--17

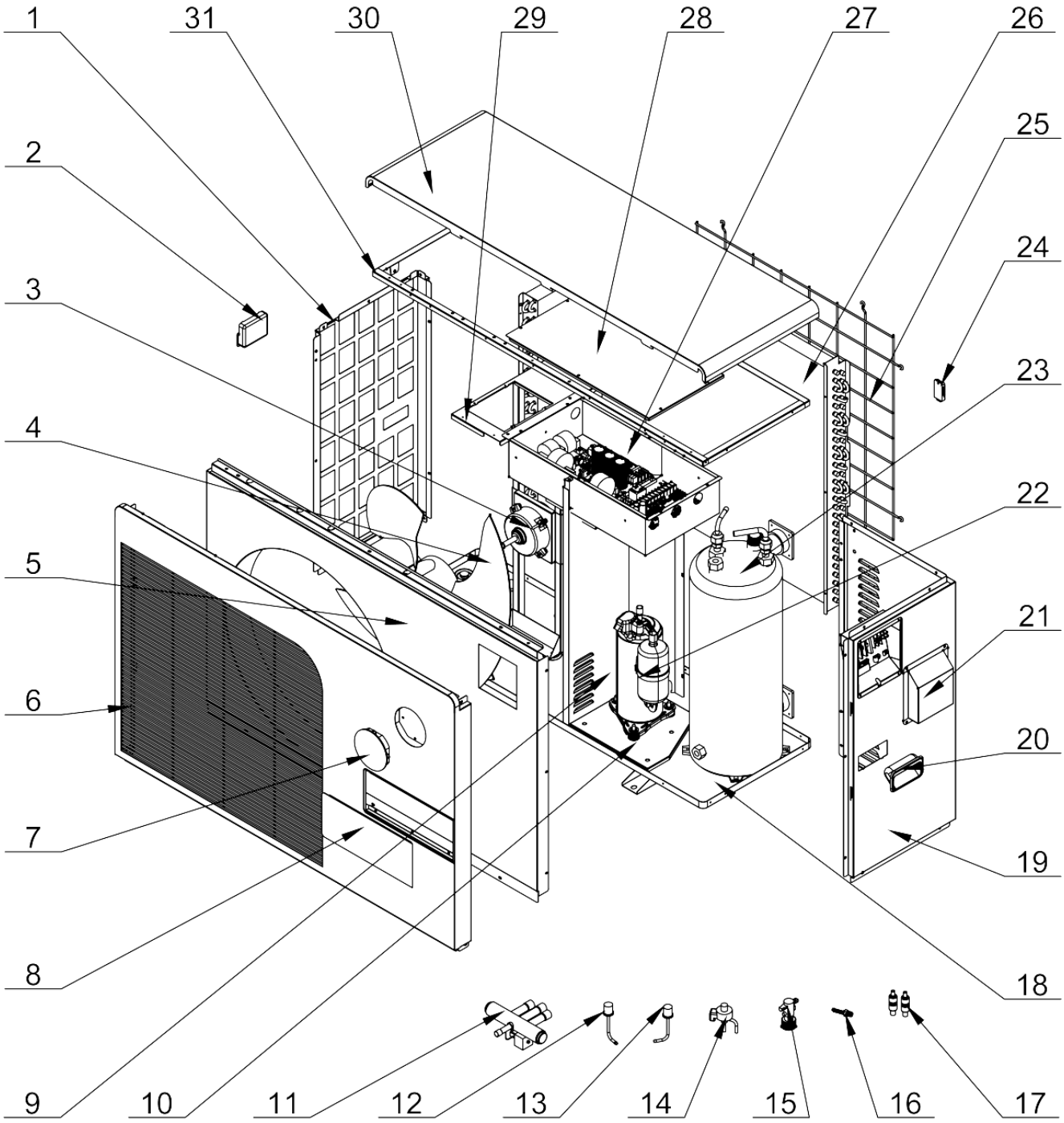

14.2 Exploded Parts Views *(continued)*

Oasis SCi2--17

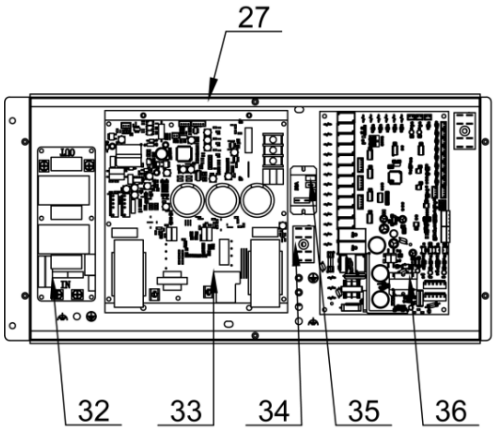

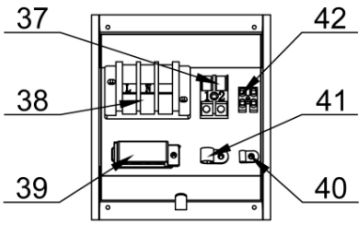

No.	Description	No.	Description
1	Left Net	22	Compressor
2	Left Handle	23	Titanium Heat Exchanger
3	DC Fan Motor	24	Ambient Temp. Sensor Holder
4	Fan Blade	25	Rear Net
5	Inner Front Plate	26	Finned Heat Exchanger
6	Outer Front Plate	27	Electrical Box
7	Wired Controller	28	Electrical Box Cover
8	Decorative Plate	29	Motor Support
9	Median Septum	30	Top Cover
10	Suspension Chassis	31	Internal Fixed Frame
11	4-Way Valve	32	Power Filter
12	High Pressure Switch	33	Driver Board
13	Low Pressure Switch	34	2U Terminal Block 1
14	EEV	35	Relay
15	Water Flow Switch	36	Main Board
16	Needle Valve	37	2U Terminal Block 2
17	Refrigerant Filter	38	3-Pole Terminal Board
18	Chassis	39	Cable Clip
19	Right Plate	40	3.2mm Cable Clamp
20	Right Handle	41	9.5mm Cable Clamp
21	Junction Box Cover	42	2-Pole Terminal Board

Troubleshooting

15.1 Introduction to Troubleshooting

If the heat pump is not operating as expected, first check the controller display for any message, protection or fault codes.

If a code is displayed, refer to the information below for code descriptions and the recommended courses of action.

If no code is displayed, refer to section 15.5 *(No Fault Code Troubleshooting)*.

For additional support, please contact your local distributor or contact Sunlover Heating directly and we will direct you to your nearest Oasis Heat Pumps service agent for assistance.

- Contact Sunlover Heating on 1800 815 913 or submit a request for assistance via our website.
- Provide the product model and serial number.
- Provide details of the issue, including photographs or videos where available.

15.2 About Messages & Fault Codes

The controller continuously monitors the operation of the heat pump and may display message, protection or fault codes during operation. These codes are accompanied by the message  icon.

Message and protection codes are typically associated with normal operating conditions or system protection functions and do not necessarily indicate a fault with the heat pump itself.

Fault codes indicate an abnormal operating condition that typically requires investigation or service.

Refer to the tables below for a description of each code and the recommended course of action. Contact a qualified service technician if the issue persists or further assistance is required.

Tip – E03 No Water Flow

The E03 message indicates that the heat pump is not detecting sufficient water flow.
In many installations this is completely normal. If the heat pump is connected to the pool filtration system, the E03 message will commonly be displayed whenever the circulation pump stops operating. Once water flow is restored, the message will automatically clear and the heat pump will resume normal operation.

Check that the water circulation pump feeding the heat pump is running, restart the unit, and if E03 remains displayed:

- Check that all valves are open
- Verify that the circulation pump is fully primed and set to the appropriate speed *(if applicable)*
- Clean the filter and pump basket
- Confirm that the bypass valve is correctly adjusted
- Ensure adequate water flow is reaching the heat pump

If the condition persists, contact a qualified service technician to service the system.

15.3 Message & Protection Codes

Code	Description	Recommended Action
E03	Insufficient water flow	Check circulation pump, filter and bypass settings *(see **E03 tip** – previous page)*.
E04	Anti-freeze protection	Normal protective feature. Unit will restart once the water or ambient temperature returns to the allowable operating range.
E05	High refrigerant pressure	Typically caused by insufficient water flow. Check filter condition, bypass valve adjustment and inlet – outlet temperature differential *(see **10.5 – Water Flow Adjustment**)*. Contact service technician if the fault persists.
E12	High compressor discharge temperature	Check water flow and filter condition. Contact service technician if the fault persists.
E23	Water outlet temperature too low (cooling mode)	Check water flow, bypass valve adjustment and setpoint temperature.
E32	Water outlet temperature too high (heating mode)	Check water flow, bypass valve adjustment and setpoint temperature. Contact service technician if the fault persists.
E33	Evaporator coil temperature too high (cooling mode)	Check installation clearances and remove any airflow obstructions. Contact service technician if the fault persists.
E44	Ambient temperature outside operating limits	Normal protective feature. Unit will restart once ambient conditions return to the allowable operating range.

15.4 Service Fault Codes

Code	Description	Recommended Action
E06	Low refrigerant pressure	Switch off the unit and contact service technician.
E09	Controller communication fault	Restart the unit. Contact service technician if the fault persists.
E10	Inverter communication fault	Restart the unit. Contact service technician if the fault persists.
E15	Water inlet sensor fault	Contact service technician.
E16	Evaporator coil sensor fault	Contact service technician.
E18	Compressor discharge sensor fault	Contact service technician.
E19	Fan motor fault	Switch off the unit and contact service technician.

15.4 Service Fault Codes *(continued)*

Code	Description	Recommended Action
E20	Inverter module protection	Abnormal inverter condition was detected. The display will alternate between 'E20' and a three-digit code. Record the code, then restart the unit. Contact service technician if the fault persists.
E21	Ambient sensor fault	Contact service technician.
E27	Water outlet sensor fault	Contact service technician.
E28	Compressor over-current protection	Restart the unit. Contact service technician if the fault persists.
E29	Suction sensor fault	Contact service technician.
E42	Heat exchanger coil sensor fault	Contact service technician.

15.5 No Fault Code Troubleshooting

Symptom	Possible Cause(s)	Recommended Action
Heat pump display screen is unresponsive to key inputs.	Display lock function is active.	Tap and hold the Power key for approximately 3 seconds to unlock the display.
Heat pump display is on, but the unit will not start.	Unit is switched off.	Unlock the display and ensure the unit is switched on (mode and performance icons visible).
	Water temperature has reached the setpoint and the unit is in standby.	This is normal operation. Wait for the next water sampling period or cycle power to the unit and retest.
	Remote control circuit is open (operation inhibited).	Check automation cable connection and external controller settings to ensure that the external relay is closed *(see **Appendix B – Automation & Remote Control**).*
Unit starts and stops frequently.	Incorrect water flow or setpoint temperature is too close to the current water temperature.	Check bypass valve adjustment and verify the desired temperature setting.
Unit will not obey timers.	Incorrect clock or timer settings.	Check settings and ensure clock is set to 24-hour time.

15.5 No Fault Code Troubleshooting *(continued)*

Symptom	Possible Cause(s)	Recommended Action
Poor cooling or heating performance.	Incorrect mode selection.	Check mode and performance settings to increase output.
	Incorrect water flow, dirty filter, incorrect bypass adjustment or inadequate airflow.	Check water flow, clean the filter, verify bypass valve adjustment and ensure airflow clearances are maintained.
	Insufficient run time.	Extend running hours.
	Insufficient heating or cooling capacity.	Conduct a heat load assessment and compare the heating or cooling demand against the unit performance specifications.
Water around the base of the heat pump	Leaking plumbing connections or damaged pipework.	Test the water using a pool test strip. If chlorine, salt or other pool chemicals are detected, immediately arrange for a service technician to check all water connections, unions and pipework for leaks.
	Condensation from the evaporator coil or pipework	If the sample is confirmed to be fresh water, this is normal operation. Ensure adequate drainage is provided and drain paths remain clear.
Excessive operating noise	Loose panels, airflow restrictions or vibration transmitted through connected pipework.	Check that all panels are secure, remove airflow obstructions and ensure pipework is adequately supported.

16.1 Warranty Introduction

This Warranty applies only to Products purchased and installed in Australia and New Zealand.

Australian Consumer Law

Our goods come with guarantees that cannot be excluded under the Australian Consumer Law. You are entitled to a replacement or refund for a major failure and for compensation for any other reasonably foreseeable loss or damage. You are also entitled to have the goods repaired or replaced if the goods fail to be of acceptable quality and the failure does not amount to a major failure.

16.2 Warranty Period

This Warranty commences on the date of purchase and applies only to the original Purchaser and the original installation location. This Warranty is not transferable.

25 Years	Titanium heat exchanger coil against corrosion *Casing of heat exchanger is covered for 2 years*
5 Years	Compressor
2 Years	All other parts
1 Year	Field labour
1 Year	Demonstration, refurbished, discontinued or otherwise previously unboxed unit/s
Commercial Installations	For commercial installations, including but not limited to health clubs, swim schools, motels, hotels, gyms and hydrotherapy centres, the Warranty Period for the complete Product is limited to twelve (12) months from the date of purchase.

16.3 Warranty Coverage

During the Warranty Period, the Company warrants that the Product will be free from defects in materials and workmanship when installed, operated and maintained in accordance with the instructions supplied with the Product.

This Warranty is subject to the terms, conditions and exclusions set out hereafter.

16.4 Warranty Remedies

If a defect in materials or workmanship is identified during the Warranty Period, the Company may, at its sole discretion:

- Repair the Product;
- Replace the Product;
- Repair or replace the defective component; or
- Arrange for the Product or defective component to be repaired or replaced by an Authorised Service Agent.

16.5 Labour Costs

This Warranty does not cover labour costs incurred more than twelve (12) months after the date of installation.

Any labour costs associated with diagnosing, removing, reinstalling, repairing or replacing the Product after this initial twelve (12) month period are the responsibility of the Purchaser.

16.6 Warranty Exclusions

This Warranty does not apply to defects, failures, damage, loss or expense arising from, or contributed to by:

a. Misuse, abuse, neglect, mishandling or accidental damage.

b. Operation using an incorrect, unstable or unsuitable electrical supply.

c. Incorrect, non-compliant or incompetent installation, including installation by a person not appropriately qualified for the work being undertaken.

d. Failure to operate, maintain or service the Product in accordance with the instructions provided in this manual.

e. Unauthorised repairs, alterations or modifications that affect the reliability, safety or performance of the Product.

f. Servicing or repairs carried out by an unauthorised person without the prior approval of the Company.

g. Damage, faults or unsatisfactory performance resulting from the use of accessories, components or equipment not approved by the Company.

h. Natural disasters or events beyond reasonable control, including hail, lightning, flood, fire, storm, earthquake or other acts of nature.

i. Corrosion, rust or deterioration of components other than the titanium heat exchanger coil caused by environmental conditions, including corrosive or coastal atmospheres.

j. Vermin, insect or pest infestation.

k. Relocation or reinstallation of the Product from its original installation site.

l. Damage, faults or performance issues resulting from incorrect application, improper sizing, unsuitable operating conditions or use outside the Product specifications.

m. Routine maintenance, consumable items or components replaced as part of normal maintenance activities.

n. Costs associated with transportation, delivery, handling, freight, removal, reinstallation or damage incurred during transit.

o. Service calls where no fault is found and the reported condition is determined to be normal operation or is addressed within the installation, operation or troubleshooting instructions contained in this manual.

p. Any fault, damage or deterioration not attributable to defects in materials or workmanship.

q. Damage caused by inadequate water flow, blocked filters, closed valves, improper bypass adjustment, freezing conditions, water chemistry outside recommended limits, or operation without adequate water circulation.

16.7 Making a Warranty Claim

For all warranty enquiries, please contact your local distributor or contact Sunlover Heating directly and we will refer you to the nearest Oasis Heat Pumps service agent for assistance.

To assist with processing your claim, please:

- Contact Sunlover Heating on 1800 815 913 or submit a request for assistance via our website.
- Provide the product model and serial number.
- Provide proof of purchase.
- Provide details of the issue, including photographs or videos where available.
- Allow reasonable access to the product for inspection and assessment if required.

Sunlover Heating Pty Ltd

Ph: 1800 815 913

Website: https://sunloverheating.com.au/online-service-request/

Email: sales@sunloverheating.com.au

16.8 Warranty Definitions

“Company” refers to Sunlover Heating Pty Ltd.

“Product” means the heat pump supplied by the Company.

“Purchaser” is the individual or organisation who buys the Heat Pump for their own use as a consumer or end user.

Appendix A
Multiple Unit Installations

A.1 Overview

Where additional heating or cooling capacity is required, two or more heat pumps may be installed to operate as a single system.

Multiple-unit installations can provide increased capacity, improved system redundancy and greater flexibility when servicing equipment. However, additional consideration must be given to airflow, water flow, plumbing layout and control arrangements to ensure that all units operate efficiently and reliably.

All installation and maintenance requirements contained within this manual continue to apply unless stated otherwise. Each unit should be commissioned individually with water flow and temperature differential adjustments made in accordance with ***Section 10 – Commissioning & Initial Start-Up***.

A.2 Installation Requirements

The same installation requirements apply for each individual heat pump, including:

- Suitable outdoor installation location;
- Stable and level mounting surface;
- Condensate management;
- Safe service access;
- Electrical isolation; and
- Minimum air clearance requirements.

Airflow Considerations

When multiple heat pumps are installed adjacent to one another, it is essential that the airflow paths of neighbouring units do not interfere with each other.

Each heat pump draws large volumes of ambient air through the rear and left-hand side of the cabinet and discharges heated or cooled air through the front fan outlet.

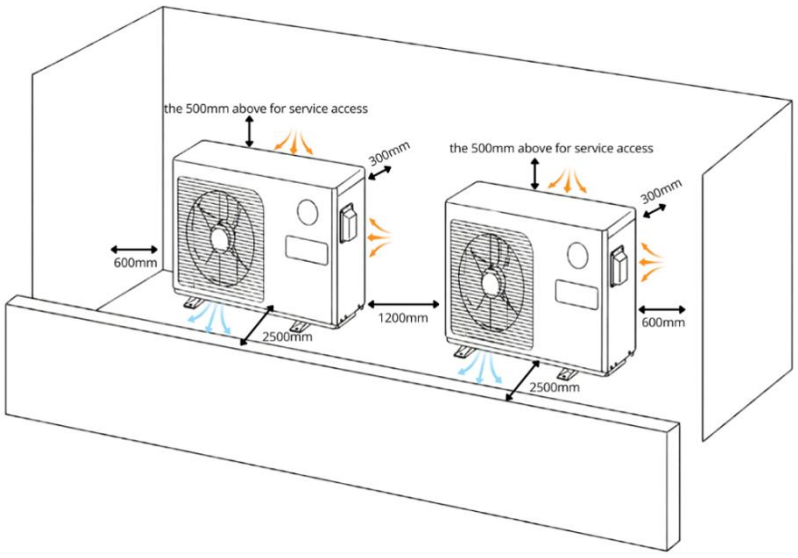

Minimum air clearance requirements

Important

In enclosed areas, discharged refrigerated air can recirculate back into the unit, reducing performance, efficiency and potentially causing the evaporator coil to ice up.

Appendix A
Multiple Unit Installations

A.3 Plumbing Requirements

Multiple heat pumps operating as a single heating or cooling system should be connected using a parallel plumbing arrangement.

Parallel plumbing promotes balanced water flow through each heat pump and allows individual units to be isolated for servicing without interrupting operation of the remaining equipment.

Water Flow Requirements

When sizing the circulation system, ensure adequate water flow is available for all connected heat pumps.

Calculate the total minimum flow requirement as follows:

Total Flow Requirement = Minimum Flow per Unit × Number of Heat Pumps

Example:

- *Heat Pump minimum flow requirement = 130 L/min*
- *Number of units = 2*

Minimum system flow requirement:

130 × 2 = 260 L/min

Bypass Arrangements

Each heat pump shall be fitted with its own bypass arrangement.

This allows:

- Individual adjustment of flow rates
- Accurate commissioning
- Isolation for servicing
- Continued operation of remaining units if one unit is removed from service

Typical Parallel Plumbing Schematic
(twin heat pump system shown)

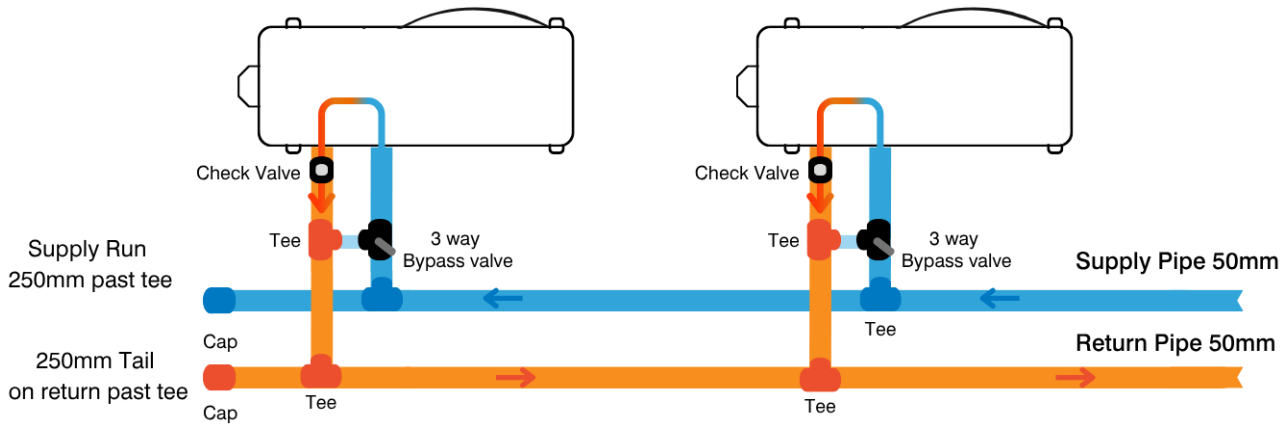

A.4 Electrical Control Requirements

Independent Operation

Where multiple heat pumps are connected in parallel and no external automation or remote controller is used, each heat pump may operate independently using its own onboard controller settings.

In this arrangement:

- No communication wiring is required between units.
- Each heat pump samples water temperature independently.
- Each heat pump starts and stops based on its own setpoint and operating mode.

External Control Operation (Automation Systems)

Where heating or cooling operation is controlled by an external system, multiple heat pumps should be configured using a **master – slave arrangement**.

In this arrangement:

- Heat Pump 1 acts as the **Master**.
- Heat Pump 2 acts as the **Slave**.
- Additional units may be connected in the same manner.

Master – Slave Controller Settings

As the external control system will take over thermostat control, each unit must be configured for on-demand cooling or heating:

For cooling applications:

- Set all units to **Cooling** mode**.**
- Set all units to **Powerful** performance level.
- Set all units to the **lowest** available temperature setpoint.

For heating applications:

- Set all units to **Heating** mode.
- Set all units to **Powerful** performance level.
- Set all units to the **highest** available temperature setpoint.

Tip

Setting the onboard temperature settings to ‘min’ (cooling) or ‘max’ (heating) ensures that operating decisions are controlled solely by the external automation system. When the externally controlled temperature setpoint is reached, the heat pump will be remotely shut down.

A.4 Electrical Control Requirements (continued)

Wiring Arrangement

- Remove the factory-fitted wire loop from the **Remote** terminals on Heat Pump 1 (Master) and install the automation cable *(see **9.6 – Remote Wiring**)*.
- Connect the **Heat Junction** output terminals on Heat Pump 1 *(see **9.5 – Pump Control Wiring**)* to the **Remote** terminals on Heat Pump 2 (Slave), as shown in the wiring schematic below.

  Ensure all wiring is adequately supported and protected from mechanical damage.

Sequence of Operation

When heating or cooling is required:

1. The automation controller closes the remote-control circuit;

   [60 second delay]

2. Heat Pump 1 (Master) starts;
3. Heat Pump 1 activates its Heat Junction output and closes the remote-control circuit for Heat Pump 2 (Slave);

   [60 second delay]

4. Heat Pump 2 starts

When heating or cooling is no longer required:

1. The automation controller opens the remote control circuit.

   [60 second delay]

2. Heat Pump 1 shuts down.
3. Heat Junction output is switched off.

   [60 second delay]

4. Heat Pump 2 shuts down.

Master – Slave Wiring Schematic

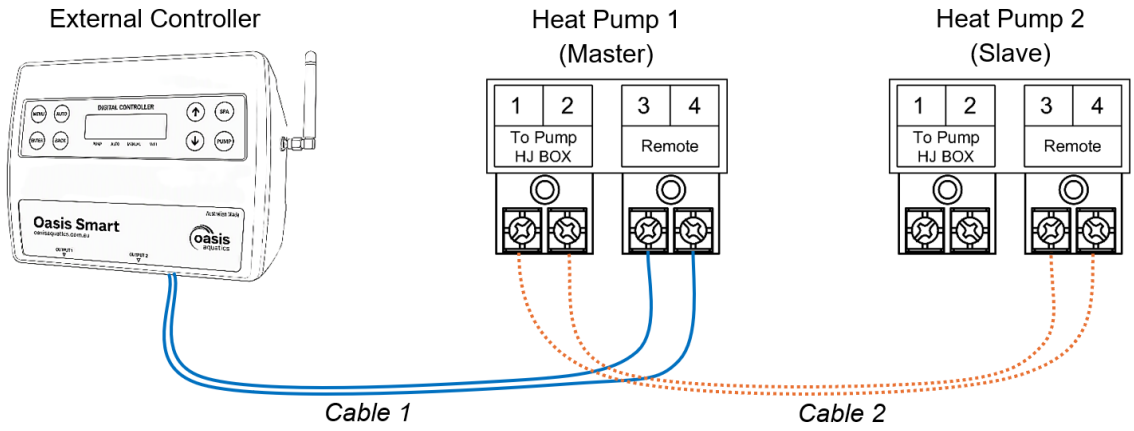

B.1 Overview

Oasis heat pumps are compatible with most pool and spa automation systems used for heating and cooling applications.

Each heat pump is supplied with a factory-fitted wire loop installed across the **Remote** terminals inside the electrical compartment. This loop forms a closed circuit which permits normal operation.

When the circuit is opened, heat pump operation is inhibited.

For remote control applications, the factory-fitted loop can be removed and replaced with a two-core cable connected to a voltage-free relay within the automation controller.

The automation system then controls heat pump operation by opening and closing the remote circuit as required.

Factory-fitted Loop

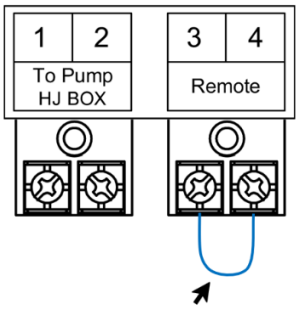

B.2 Controller Settings

When remotely controlled, the heat pump effectively becomes a slave device, with temperature control performed by the external automation system.

To ensure correct operation, the heat pump must be configured so that it is always available to operate whenever the remote circuit is closed by the automation system

Cooling Applications

Configure the heat pump controller as follows:

- Cooling mode
- Powerful performance mode
- Lowest available temperature setpoint
- No run timers enabled

Heating Applications

Configure the heat pump controller as follows:

- Heating mode
- Powerful performance mode
- Highest available temperature setpoint
- No run timers enabled

Tip

Refer to ***Section 11 – Controller Operation*** for applicable controller settings instructions.

Appendix B
Automation & Remote Control

B.3 Remote Cable Connection

Remove the factory-fitted wire loop from the **Remote** terminals and install the automation cable *(see **9.6 – Remote Wiring**)*.

Use a suitable two-core control cable and ensure all wiring is adequately supported and protected from mechanical damage.

Remote Wiring Schematic

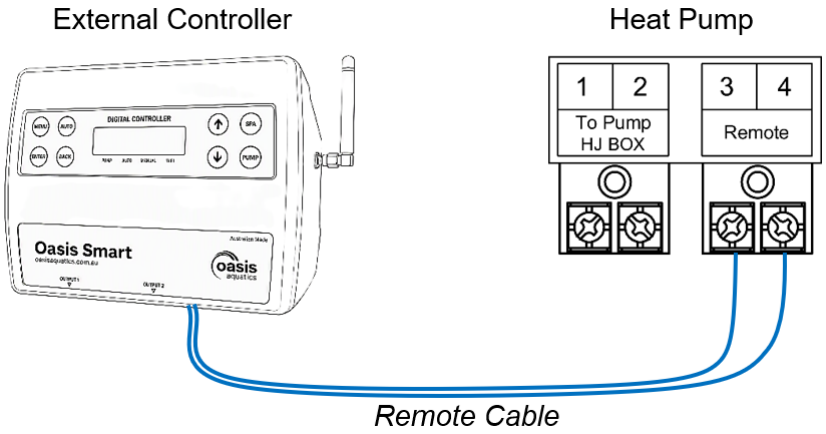

B.4 Verification and Synchronisation

Once installation is complete, verify correct operation of both the heat pump and automation controller.

When the remote circuit is open (OFF), heat pump operation is inhibited regardless of the ON/OFF state shown on the heat pump display.

For successful remote operation, the heat pump must be configured so it is ready to operate whenever the remote circuit closes.

Step 1: Prepare the Heat Pump

Unlock the controller and switch the heat pump ON.
Confirm that all settings are in accordance with ***B.2 – Controller Settings***.

Step 2: Confirm Start-Up Operation

Enable heating or cooling from the automation controller.
Allow any external sampling cycle or controller delay to complete.

Once the relay closes:

- Wait approximately 60 seconds
- Confirm the heat pump commences its normal start-up sequence
- Verify the pump, fan and compressor icons appear in succession *(see **10.3 – Start-Up Sequence**)*.

Tip

For **Oasis Smart** automation controllers, a three-minute sampling period is performed before the heater relay closes. Once the relay is activated, a green heat pump icon is displayed within the app.

B.4 Verification and Synchronisation (continued)

Step 3: Confirm Shut-Down Operation

Switch off the heat pump via the automation controller.

Verify that:

- The remote circuit opens
- The heat pump enters its shutdown sequence
- Heat pump operation ceases after approximately 60 seconds.

Tip

Where multiple heat pumps are configured in accordance with **Appendix A – Multiple Unit Installations**, a delay may be observed between units as they start or stop in succession.

Step 4: Final Synchronisation Check

Once correct operation has been verified, the heat pump controller settings must remain unchanged.

Changes to operating mode, temperature setpoint, timers or ON/OFF status may prevent correct operation of the automation system.

Important

When handing over a remotely controlled installation, ensure the end user understands that system control is performed primarily by the automation controller. Any changes to heat pump controller settings may result in loss of synchronisation and unnecessary service call-outs.

Notes

Notes

INSTALLATION RECORD

DEALER / INSTALLER NAME

SERIAL NUMBER

DATE INSTALLED

Sunlover Heating Pty Ltd is the sole distributor of Oasis Heat Pumps in Australia

For enquiries, contact us.

sunloverheating.com.au

sales@sunloverheating.com.au

1800 815 913

Head Office
6-8 Austral Place
Hallam VIC 3803

Phone: 03 9887 2131

New South Wales
Unit 2, 10 Boden Road
Seven Hills NSW 2147

Phone: 02 9838 0000

Queensland
11 Andy Court
Upper Coomera QLD 4209

Phone: 07 5679 6821

New Zealand
Oasis Heat Pumps
Unit 1, 4 Antares Place
Rosedale, Auckland 0632
Phone: 09 535 8891