sunlover heating

NEW

OASIS C10 HEAT PUMPS

- ✓ 10% MORE HEATING CAPACITY
- ✓ EXTEND YOUR SEASON EVEN FURTHER
- ✓ HEATING & COOLING WITH AUTO DEFROST
- ✓ DESIGNED FOR BOTH EXTENDED SEASON & ALL YEAR-ROUND HEATING

SWIM IN A WARM POOL FOR AS LITTLE AS

$2.60
PER DAY

SPASA Awards of Excellence HIGHLY COMMENDED

SPASA Awards of Excellence GOLD AWARD

SPLASH! Environmental Awards

MULTI AWARD WINNERS

Your pool heating Partner

✓ **TITANIUM SPIRAL HEAT EXCHANGER**

More efficient than standard heat exchangers and comes with a lifetime warranty against corrosion

✓ **COMMERCIAL GRADE ABS PLASTIC CASING**

✓ **RUSTPROOF & ANTI-CORROSIVE**

✓ **SUPER QUIET OPERATION**

SPECIFICATIONS

Model		Oasis C10
Heating Capacity	kW	10.0
Heating Power Input	kW	1.90
Running Current	A	8.70
Power Supply	V / Hz	230V / 50Hz
Dimensions (L/W/H)	mm	946 x 343 x 635
Dimensions Shipping (L/W/H)	mm	950 x 390 x 745

NB: Heating capacity is based on 19°C air / 26°C water

SWIM IN A WARM POOL FOR AS LITTLE AS $2.60 PER DAY

ANNUAL OPERATING COST. SYDNEY EXAMPLE. (28m² Pool)

* Figures are based on a 28 sq mtr Sydney pool running at 28°c with an OASIS heat pump between the months of September and April. Estimated costs only, actual costs dependant on weather and specific pool environment. Costs based on natural gas and electrical pricing as at 1/1/2014 compared with standard domestic electricity tariff. Pool cover on from 6pm to 6am.

$625.00
PER YEAR

OASIS C10 specifications

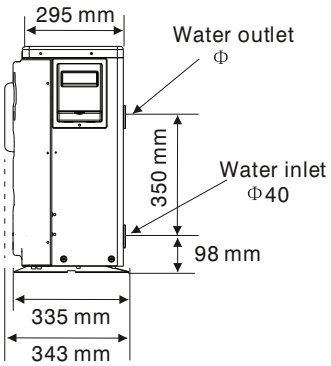

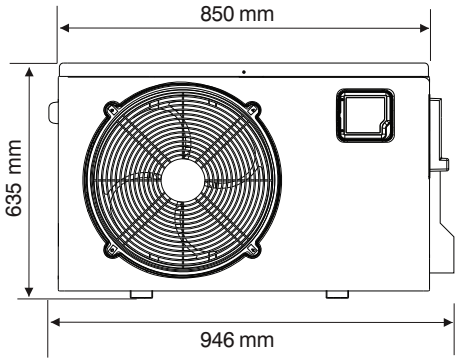

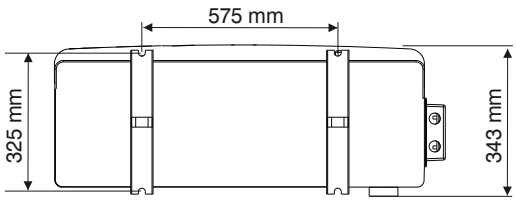

Contact Sunlover Heating to find out more about our Heat Pump Range

Head Office
62 Parkhurst Dr
Knoxfield VIC 3180
T: 03 9887 2131
F: 03 9887 4931

New South Wales
Unit 1, 20-22 Foundry Rd
Seven Hills, NSW 2147
T: 02 9838 0000
F: 02 9838 0466

Queensland
Unit 1, 8 Reichert Dr
Molendinar QLD 4214
T: 07 5679 6821
F: 07 5597 7361

T: 1800 815 913 sales@sunloverheating.com.au **www.sunloverheating.com.au**

sunlover heating